OKI

# C7400/C7200
# Color LED Page Printer
# MAINTENANCE MANUAL

ODA/OEL/INT

2002-12-12 Rev.9

**Document Revision History**

| Rev.No. | Date | Corrected items | | | Person in charge |
|---|---|---|---|---|---|
| | | No. | Page | Description of change | |
| 1 | 2000-05-29 | | | ISSUE | E4 Yamazaki |
| 2 | 2000-05-31 | | | | E4 Murakami |
| 3 | 2000-12-04 | | | | NIP9 Yamazaki |
| 4 | 2000-12-15 | | | | NIP9 Yamazaki |
| 5 | 2001-05-15 | | | | CN11 Kasuya |
| 6 | 2001-10-12 | | | | NP33 YAMAZAKI |
| 7 | 2002-05-28 | | | | NP33 YAMAZAKI |
| 8 | 2002-08-09 | | | | |
| 9 | 2002-12-12 | | | | NP34 Ueda |

# PREFACE

This manual describes the procedures of the maintenance of the C7400/C7200 of printers.

The document is produced for maintenance personnel use. For details on the procedures for handling the C7400/C7200 of printers, see its user documentation.

***Note!***
- The descriptions in this manual are subject to change without prior notice.
- In preparing the document, efforts have been made to ensure that the information in it is accurate. However, errors may be crept into the document. Oki Data assumes no responsibility for any damage resulting from, or claimed to be the results of, those repairs, adjustments or modifications to the printers which are made by users using the manual.
- The parts used for the printers are sensitive and, if handled improperly, may be damaged. It is strongly recommended that the products are maintained by maintenance men registered with Oki Data.

# CONTENTS


**1. CONFIGURATIONS ..... 7**

1.1 System Configuration ..... 7
1.2 Printer Configuration ..... 8
1.3 Option Configuration ..... 9
1.4 Specifications ..... 10

**2. PARTS REPLACEMENT ..... 12**

2.1 Precautions in Replacing Parts ..... 12
2.2 Parts layout ..... 14
2.3 Replacing Parts ..... 20
2.3.1 Top Cover ..... 22
2.3.2 LED Assy/ LED Assy Spring ..... 23
2.3.3 Top Cover Unit ..... 24
2.3.4 Control Panel Assy/ Control Panel Bezel/ LED Control PWB/ Toner Sensors/ Stacker Full Sensor/ Control Panel/ Control Panel Tape Harness/ Eject Rollers ..... 25
2.3.5 Top Cover Handle/ Top Cover Latch/ Top Cover Latch Spring ..... 26
2.3.6 Eject Guide Assy ..... 27
2.3.7 Cassette Assy/ Front Cover Assy/ Front Cover Inner Baffle ..... 28
2.3.8 Retard Pad Assy/ Retard Pad Assy Spring ..... 29
2.3.9 Feed Roller and Nudger Roller ..... 30
2.3.10 Rear Cover ..... 31
2.3.11 Face-Up Tray ..... 32
2.3.12 Left Side Cover ..... 33
2.3.13 Right Side Cover ..... 34
2.3.14 Multipurpose Tray Assy/ Multipurpose Tray Cover Assy/ Links/ Multipurpose Tray Top Cover/ Multipurpose Tray Drive Gear ..... 35
2.3.15 Drum Contact Assys ..... 36
2.3.16 Registration Roller Assy (A)/ Registration Drive Gear (A) ..... 37
2.3.17 Registration Roller Assy (B) ..... 38
2.3.18 Registration Clutch and Registration Motor Assy ..... 39
2.3.19 Main Cooling Fan ..... 40
2.3.20 Color Registration Sensor Assy ..... 41
2.3.21 Duplex Guide Assy ..... 42
2.3.22 Electrical Chassis Cooling Fan ..... 43
2.3.23 Printer Engine Controller PWB ..... 44
2.3.24 Printer Unit Chassis ..... 45
2.3.25 Entrance Cassette Sensor Actuator ..... 46
2.3.26 Entrance Sensor PWB ..... 47
2.3.27 Entrance MT Sensor Actuator and Entrance Belt Sensor Actuator ..... 48
2.3.28 Fuser Exit Roller ..... 49
2.3.29 Exit Sensor Assy ..... 50
2.3.30 Fuser Latching Handle (L) ..... 51
2.3.31 Belt Motor Assy ..... 52
2.3.32 Fuser Latching Handle (R) ..... 53
2.3.33 Main Motor Assy ..... 54

2.3.34 Main Feeder Drive Motor ..... 55
2.3.35 Contact Assy/ Left Plate Assy ..... 56
2.3.36 Low Voltage Power Supply ..... 57
2.3.37 High voltage power supply ..... 58
2.3.38 Main Feed Assy ..... 59
2.3.39 Cassette/ Left Guide Assy ..... 60
2.3.40 Cassette/ Right Guide Assy ..... 61
2.3.41 Fuser Unit ..... 62
2.3.42 Belt Unit ..... 63
2.3.43 Duplex Unit ..... 64
2.3.44 Guide Rails (L) and (R) ..... 65
2.3.45 Duplex Transport Assembly ..... 66
2.3.46 CU Assy ..... 68

**3. ADJUSTMENTS ..... 70**

3.1 Maintenance Modes and Their Functions ..... 70
3.1.1 Maintenance menu ..... 70
3.1.2 Engine maintenance mode ..... 71
3.1.2.1 Operator panel ..... 71
3.1.2.2 General self-diagnosis mode (level 1) ..... 71
3.1.2.2.1 Entering self-diagnosis mode (level 1) ..... 71
3.1.2.2.2 Exiting self-diagnosis mode ..... 71
3.1.2.3 Switch scan test ..... 72
3.1.2.4 Motor and clutch test ..... 75
3.1.2.5 Test printing ..... 77
3.1.2.6 NVM initialization ..... 81
3.1.2.7 Consumable counter display ..... 82
3.1.2.8 Consumable counter display - continuous ..... 82
3.1.2.9 Error Messages and their Details ..... 83
3.1.3 SWA board adjustments ..... 87
3.1.3.1 Short plug settings ..... 88
3.1.3.2 Printings singly using controller-equipped printer ..... 88
3.2 Adjustments after Parts Replacement ..... 89
3.2.1 Precautions in replacing engine controller board ..... 89
3.2.2 Precautions in replacing EEPROM ..... 89
3.2.3 EEPROM replacement after SWA board replacement ..... 90
3.3 Color Balance Adjustment ..... 91

**4. PERIODIC MAINTENANCE ..... 93**

4.1 Parts Replaced Periodically ..... 93
4.2 Cleaning ..... 93
4.3 Cleaning LED Lens Array ..... 93
4.4 Cleaning Pickup Roller ..... 93

**5. TROUBLESHOOTING PROCEDURES ..... 94**

5.1 Before Troubleshooting ..... 94
5.2 Checking before Troubleshooting Image Problems ..... 94
5.3 Precautions in Troubleshooting Image Problems ..... 94

5.4 Preparation for Troubleshooting ..... 94
5.5 Troubleshooting ..... 94
5.5.1 LCD messages list ..... 95
5.5.2 Preparation for troubleshooting ..... 100
5.5.3 Troubleshooting image problems ..... 111

**6. CONNECTION DIAGRAM ..... 125**

6.1 Resistance Checks ..... 125
6.2 Program/Font ROM Layouts ..... 129

**7. Parts List ..... 133**

**APPENDIX A CENTRONICS PARALLEL INTERFACE ..... 149**

**APPENDIX B 2ND/3RD TRAY MAINTENANCE ..... 153**

1. Parts Replacement ..... 153
1.1 Cover Idle Roller Assy ..... 153
1.2 PCB ..... 154
1.3 Feeder Drive Assy ..... 155
2. C7400/C7200 2nd/3rd Tray PARTS LIST ..... 156

# 1. CONFIGURATIONS

## 1.1 System Configuration

Figure 1-1 shows the system configuration of the C7400/C7200 of printers.

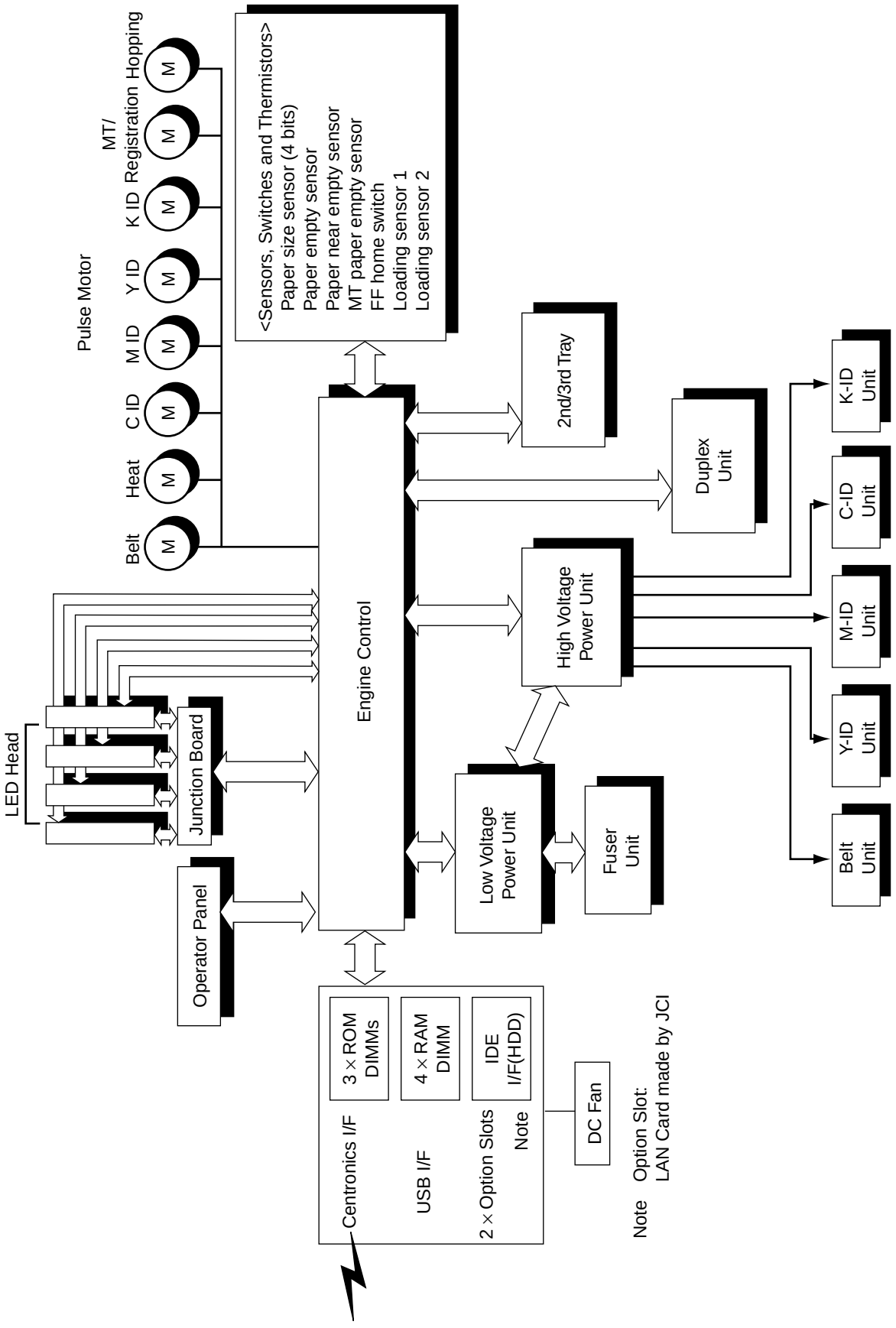


Figure 1-1

## 1.2 Printer Configuration

The inside of the printers is composed of the followings:

- Electrophotographic Processor
- Paper Paths
- Controller Block (CU and PU)
- Operator Panel
- Power Units (High Voltage Unit and Low Voltage Unit)

Figure 1-2 shows the printer configuration.

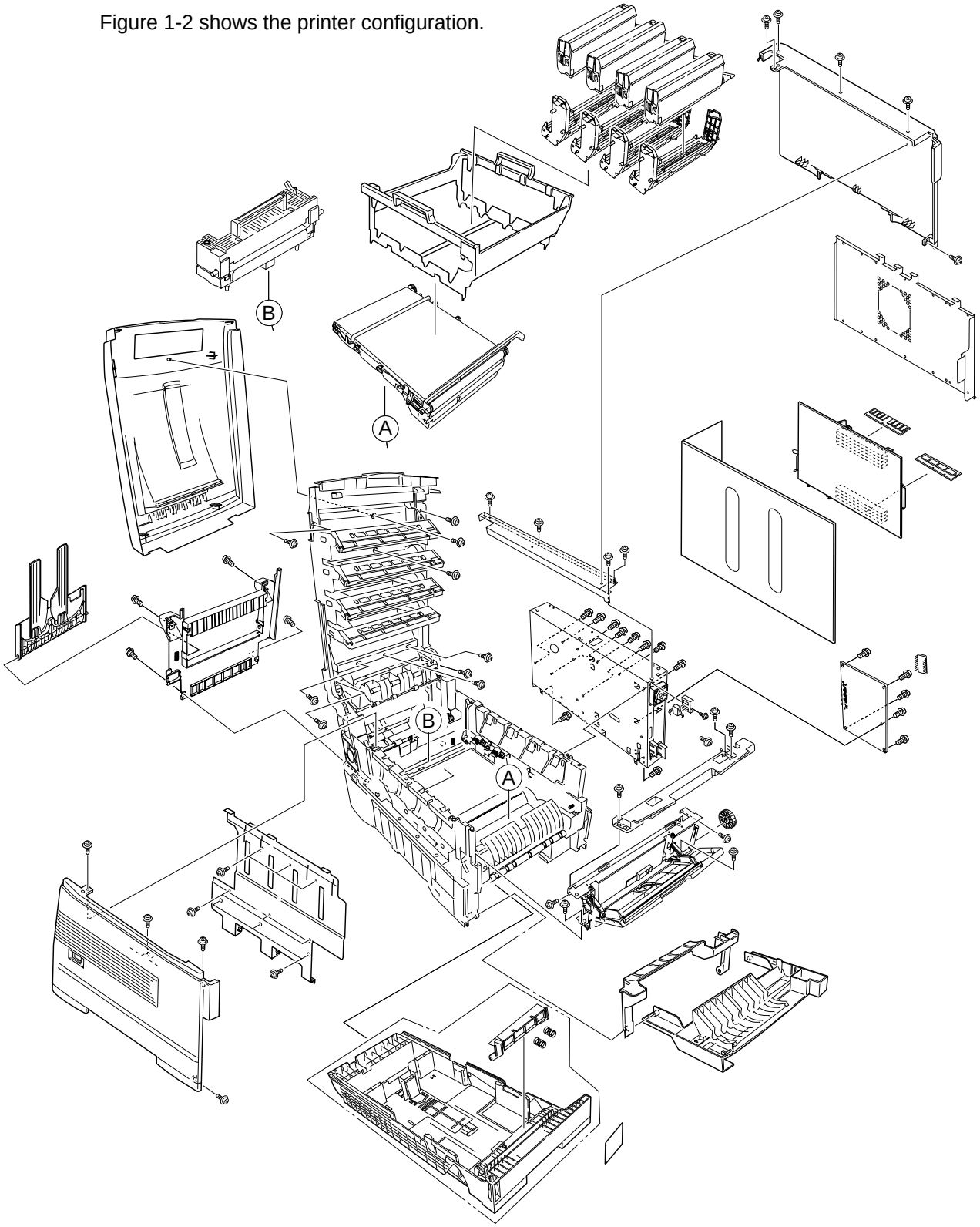


Figure 1-2

## 1.3 Option Configuration

The followings are available as options on the C7400/C7200 of printers.

(1) 2nd Tray/ 3rd Tray

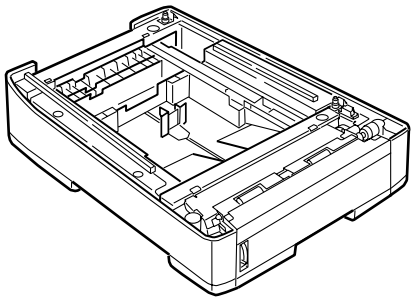

(2) Duplex Unit

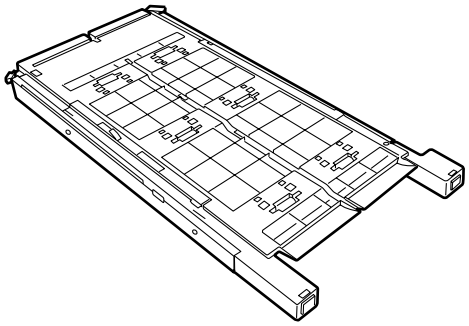

(3) Expansion Memory 64/128/256 MB

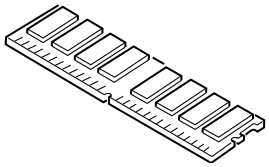

(4) Internal Hard Disk

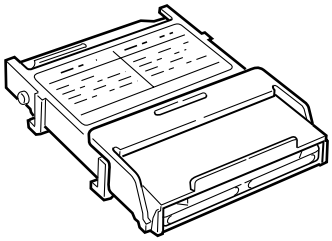

(5) Ethernet Board

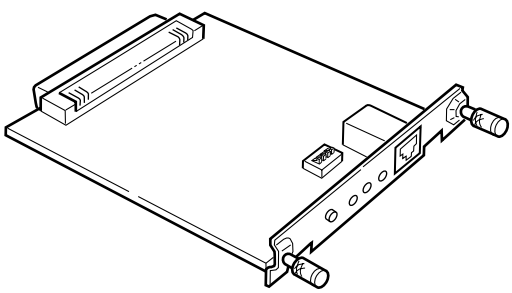

## 1.4 Specifications

| | |
|---|---|
| (1) External Dimensions | Height: 430mm Width: 430mm Length: 620mm |
| (2) Weight | 42 kg |
| (3) Papers | Type: Ordinary paper, Transparencies (Recommended: MLOHP01)<br>Size: Postal card, Legal 13" or 14", Executive, A4, A5, B5, A6 (Only the 1st tray and the front feeder support A6 and postal-card sizes.)<br>Weight: 1st tray 55 kg to 90 kg (64 to 105g/$m^2$)<br>Front feeder 55 kg to 140 kg (64 to 163g/ $m^2$) |
| (4) Print Speed | Color: 12 pages per minute (Transparency: 5 pages per minute)<br>Monochrome: 20 pages per minute (Transparency: 12 pages per minute)<br>Postal Card, Label, Thick Paper: 8 pages per minute |
| (5) Resolution | 600 × 600 dots per inch |
| (6) Power Input | 100VAC ±10% |
| (7) Power Consumption | Peak: 1300W Normal Operation: 400W (5% duty)<br>Idle: 110W Power Saving Mode: 45W or less |
| (8) Frequency | 50Hz or 60Hz ±2% |
| (9) Noise | Operation: 54 dB (Without second tray)<br>Standby: 45 dB<br>Power Saving: 43 dB |
| (10) Consumable Life | Toner Cartridge: 5,000 pages (5% duty) (each of Y, M, C and K)<br>Large-Capacity Toner Cartridge: 10,000 pages (5% duty) (each of Y, M, C and K)<br>Image Drum: 30,000 pages (5% duty, Continuous printing) (each of Y, M, C and K) |
| (11) Parts Replaced Periodically | Fuser Unit Assy: Every 60,000 pages<br>Belt Cassette Assy: Equivalent of 60,000 pages (3 pages/job) |

(12) Temperatures and Relative Humidities

Temperature

Temperature Condition

| | Temperature (˚F) | Temperature (˚C) | Remark |
|---|---|---|---|
| Operation | 50 to 89.6 | 10 to 32 | 17 to 27˚C (Temperatures to assure full color print quality) |
| Non-Operation | 32 to 109.4 | 0 to 43 | Power-off |
| Storage (Max. One Year) | -14 to 109.4 | -10 to 43 | With drum and toner |
| Transport (Max. One Month) | -20 to 122 | -29 to 50 | With drum and without toner |
| Transport (Max. One Month) | -20 to 122 | -29 to 50 | With drum and toner |

Humidity

Humidity Condition

| | Relative Humidity (%) | Max. Wet-Bulb Temperature(˚C) | Remark |
|---|---|---|---|
| Operation | 20 to 80 | 25 | 50 to 70% (Humidities to assure full color print quality) |
| Non-Operation | 10 to 90 | 26.8 | Power-off |
| Storage | 10 to 90 | 35 | |
| Transport | 10 to 90 | 40 | |

(13) Printer Life 600,000 pages (on a A4-size basis) or five years

# 2. PARTS REPLACEMENT

This section describes the procedure for replacing the parts, assemblies and units in the field. The replacing procedure is given for detachment. To attach, use the reverse procedure.

## 2.1 Precautions in Replacing Parts

(1) Before replacing the parts, be sure to remove the AC cable and the interface cable.

(a) To remove the AC cable, always use the following procedure.

i) Flip the power switch of the printer off (to “O”).
ii) Pull the AC inlet plug of the AC cable out of the AC receptable.
iii) Remove the AC cable and the interface cable from the printer.

(b) To connect the printer again, always use the following procedure.

i) Connect the AC cable and the interface cable to the printer.
ii) Insert the AC inlet plug into the AC receptacle.
iii) Flip the power switch of the printer on (to “I”).

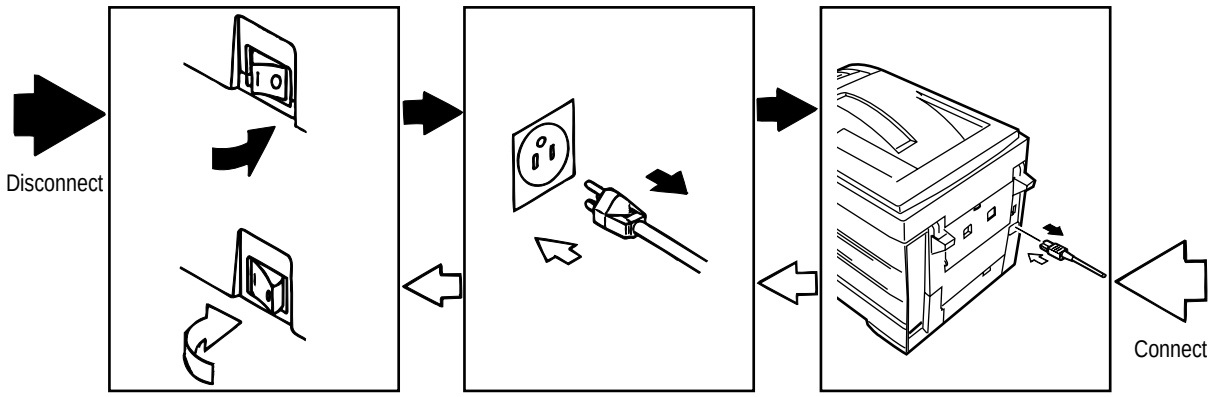


(2) Do not disassemble the printer so long as it operates properly.

(3) Minimize the disassembly. Do not detach parts other than those shown in the replacing procedure.

(4) For maintenance, use designated tools.

(5) Follow the order instructed to disassemble the printer. Incorrect order may damage the parts.

(6) Small parts such as screws and collars tend to get lost, so temporarily place and fix them in their original positions.

(7) When handling ICs and circuit boards such as microprocessors, ROMs and RAMs, do not use gloves that likely to have static.

(8) Do not place the printed circuit boards directly on the printer or the floor.

[Maintenance Tools]

Table 2-1 lists tools necessary to replace the printed circuit boards and the units.

Table 2-1 Maintenance Tools

| No. | Maintenance Tools | | Q' ty | Use for | Remark |
|---|---|---|---|---|---|
| 1 | | No. 1-100 Philips screwdriver | 1 | Screws of 2 to 2.5mm | |
| 2 | 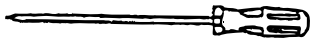 | No. 2-200 Philips magnetic screwdriver | 1 | Screws of 3 to 5mm | |
| 3 | | No. 3-100 screwdriver | 1 | | |
| 4 | | No. 5-200 screwdriver | 1 | | |
| 5 | 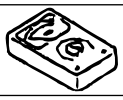 | Digital multimeter | 1 | | |
| 6 | | Pliers | 1 | | |
| 7 | | Handy cleaner | 1 | | |
| 8 | | LED Head cleaner P/N 4PB4083-2248P001 | 1 | LED head cleaning | |
| 9 | 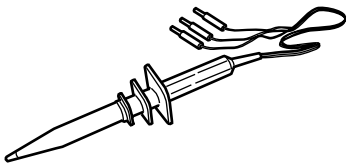 | High-voltage probe | 1 | | |

## 2.2 Parts layout

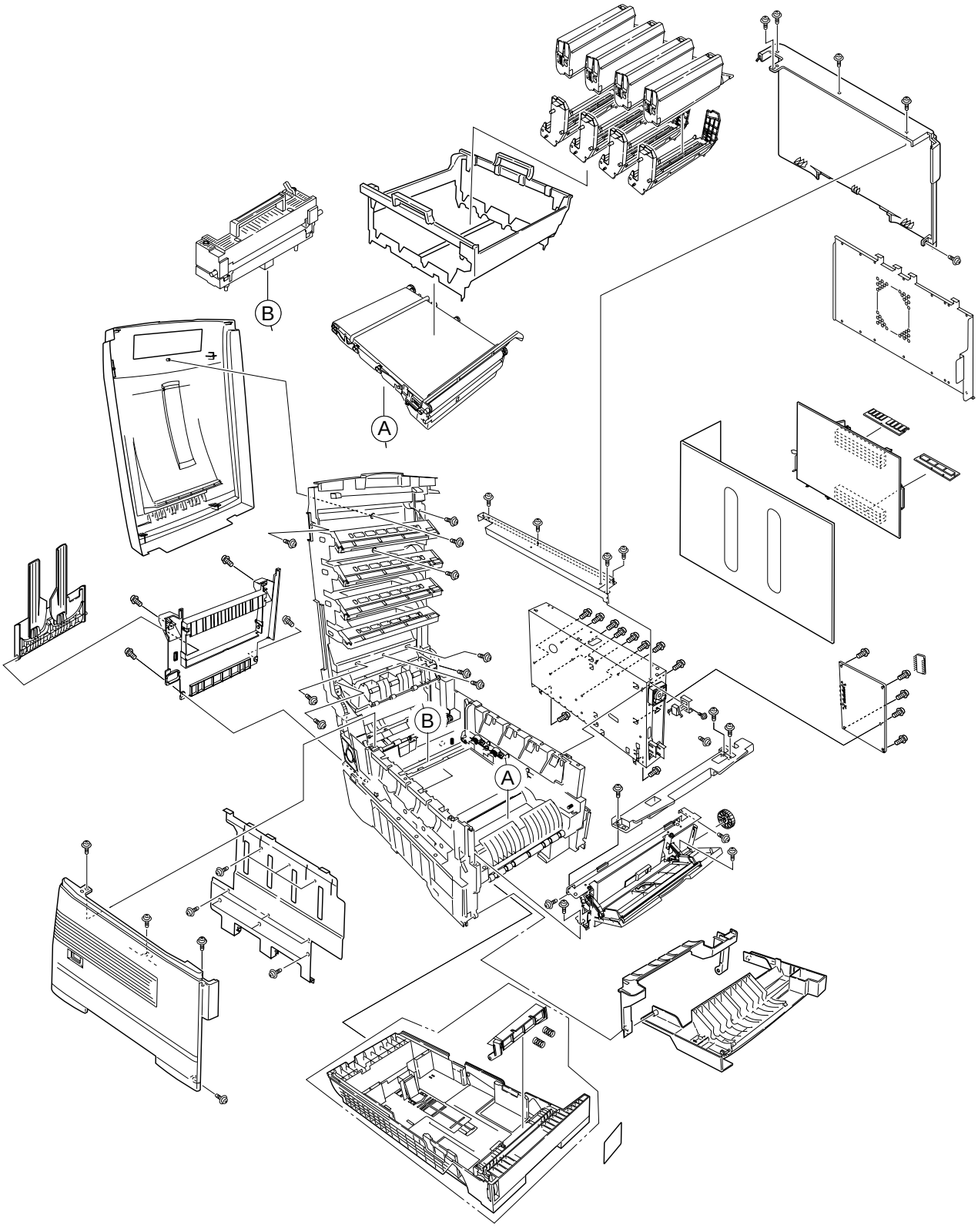


Figure 2-1

[Top Cover Assy]

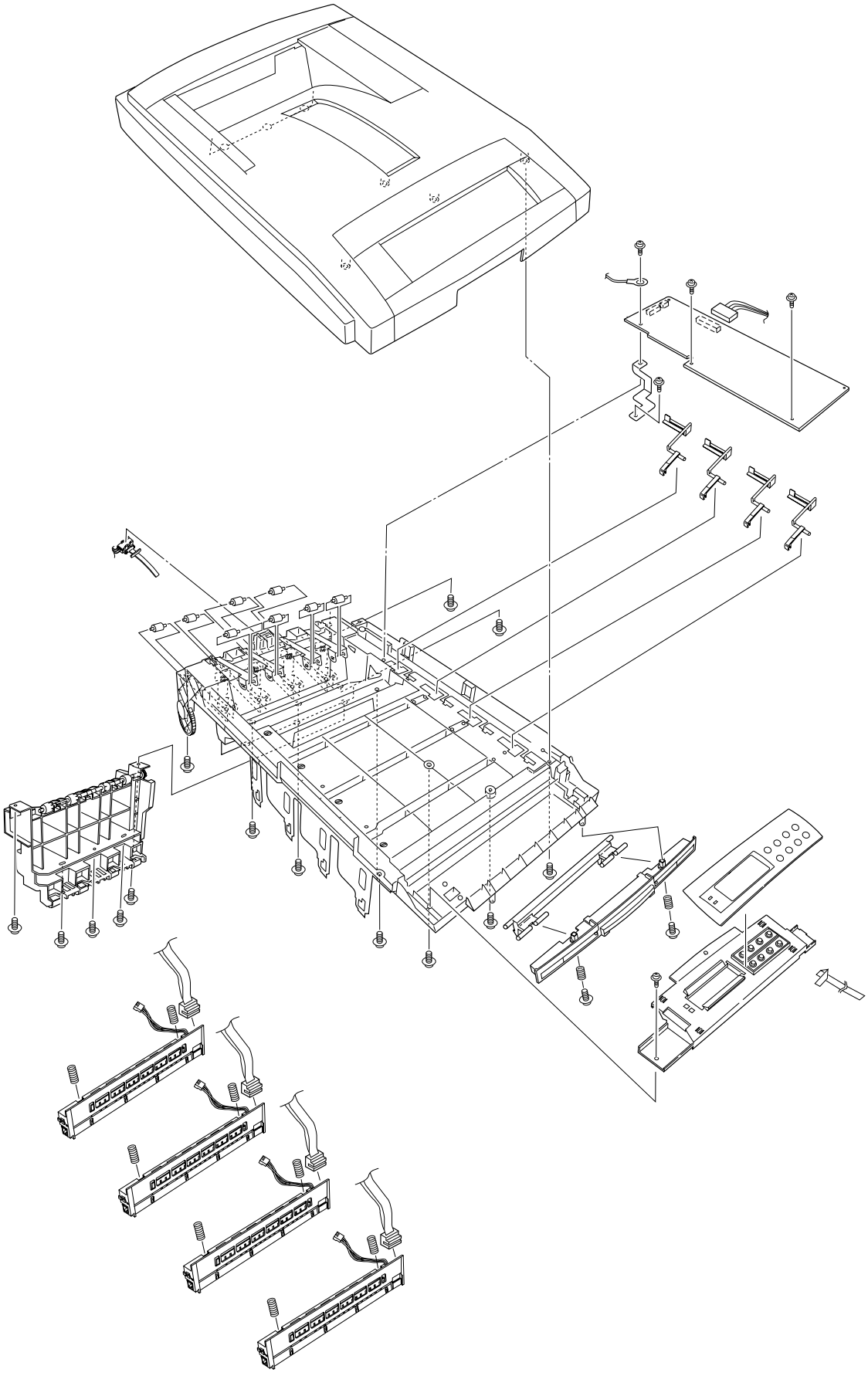

Figure 2-2

[Printer Unit-1/2]

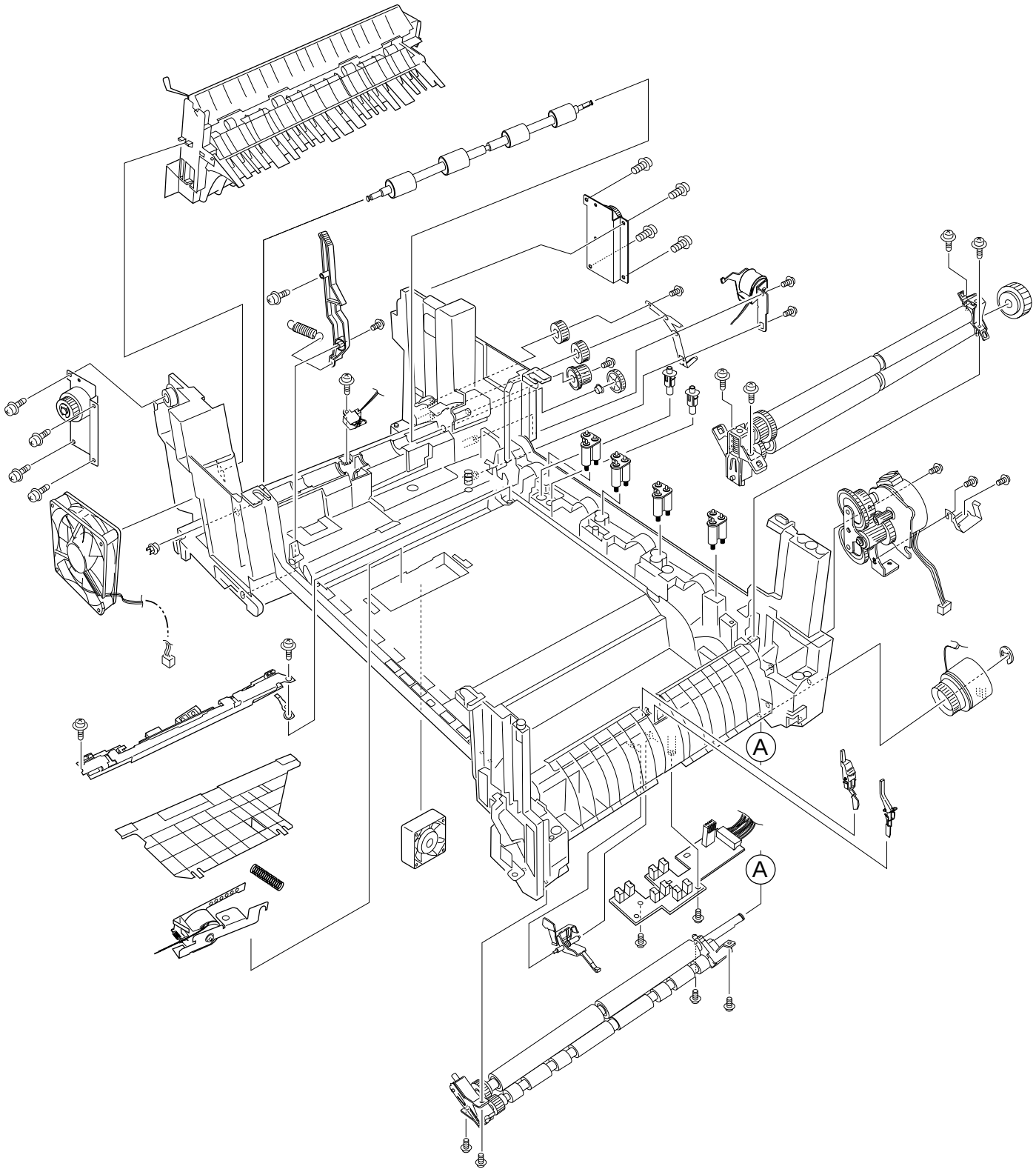


Figure 2-3

[Printer Unit-2/2]

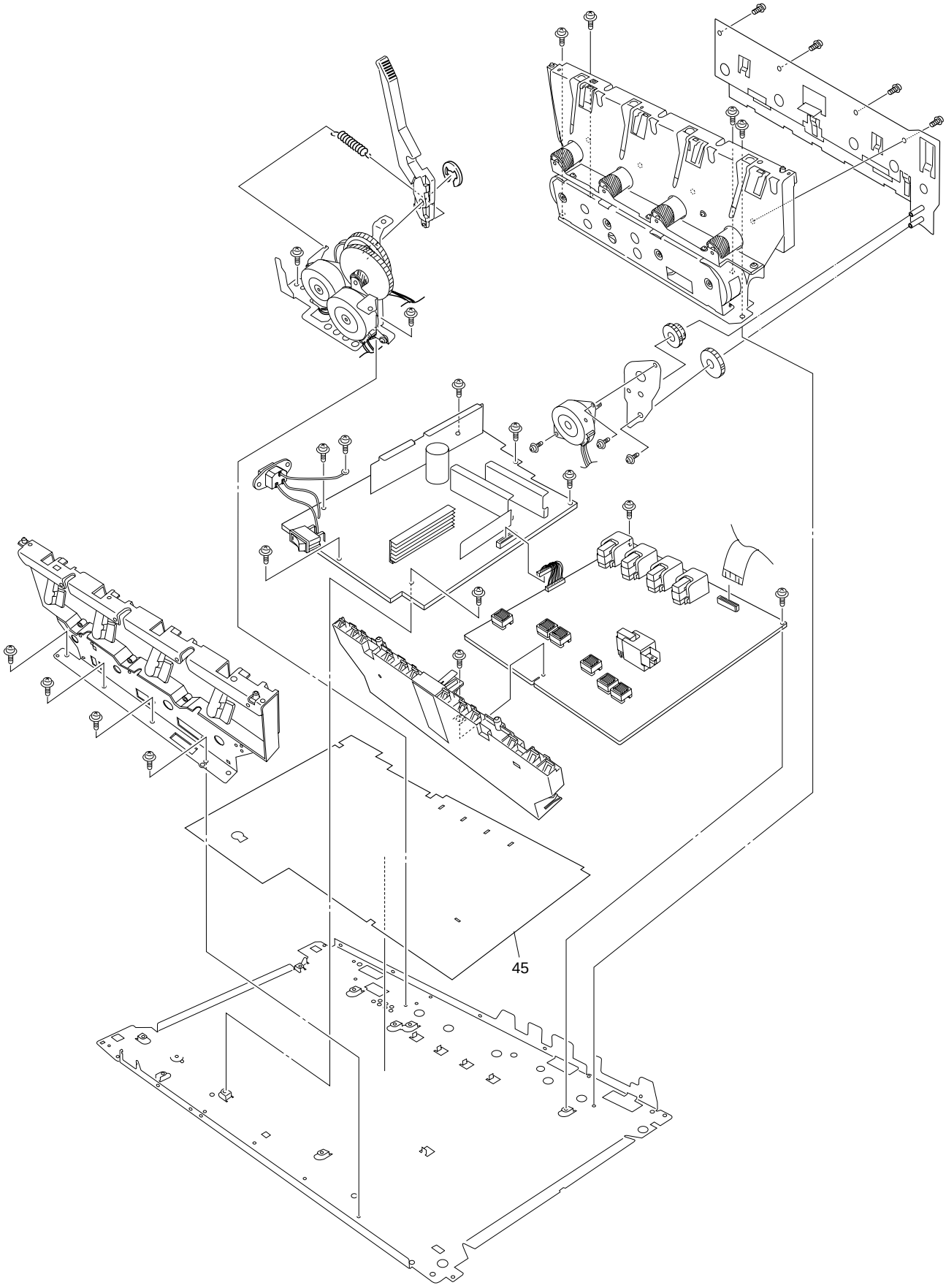


Figure 2-4

[Cassette Guide Assy (L),(R)]

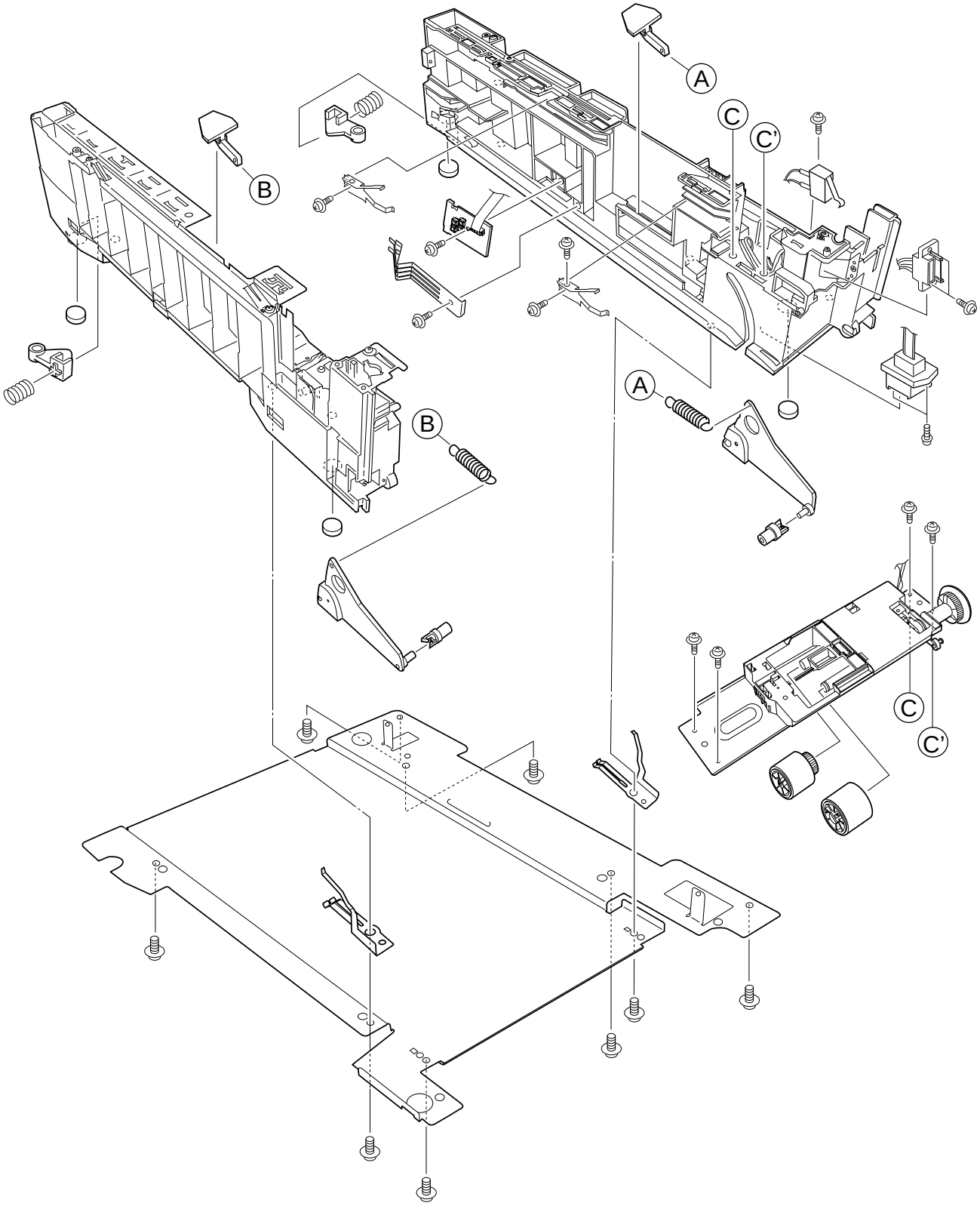


Figure 2-5

[Duplex Unit]

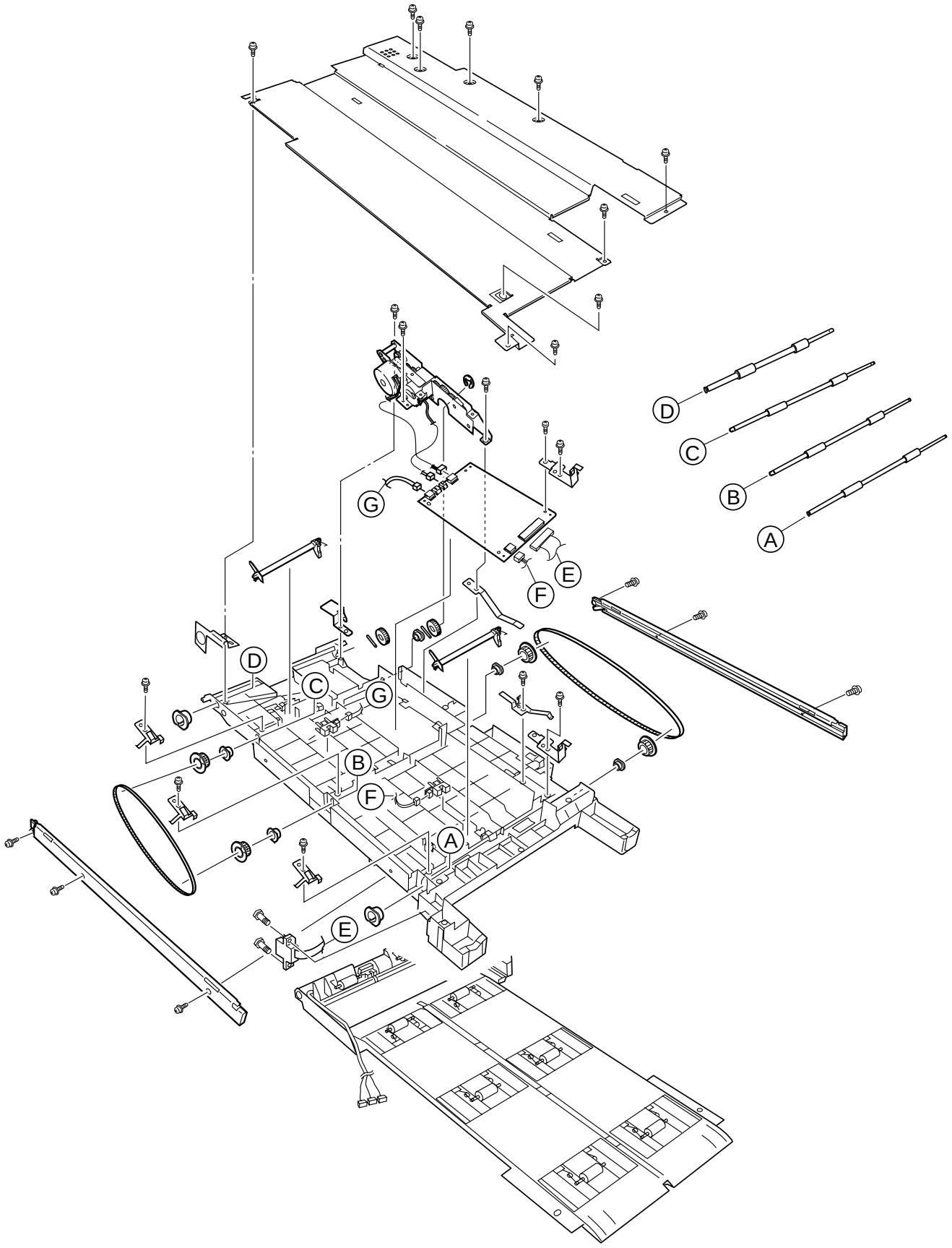


Figure 2-6

## 2.3 Replacing Parts

This section describes how to replace the parts and assemblies shown in the following disassembling system diagram.

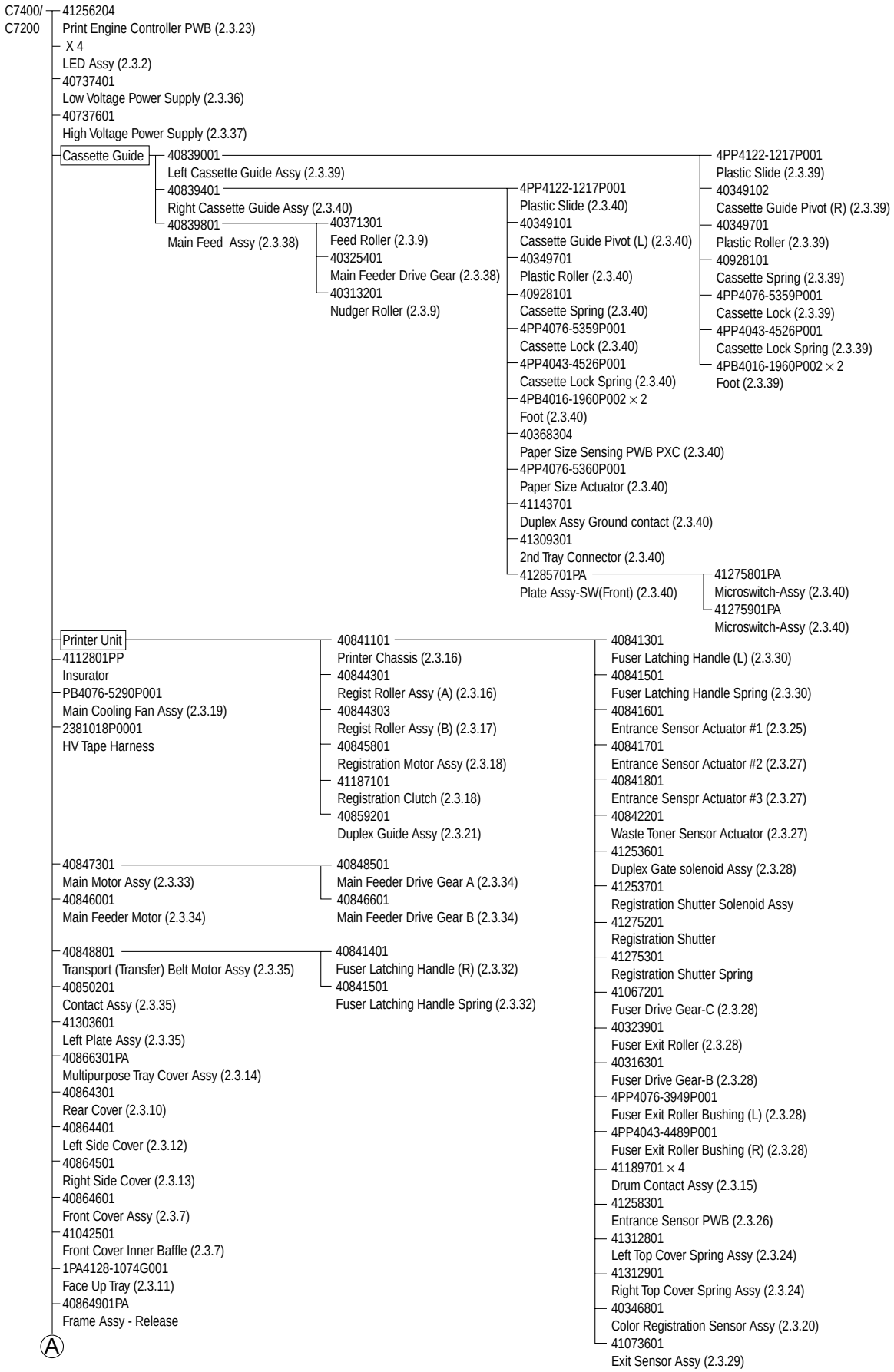

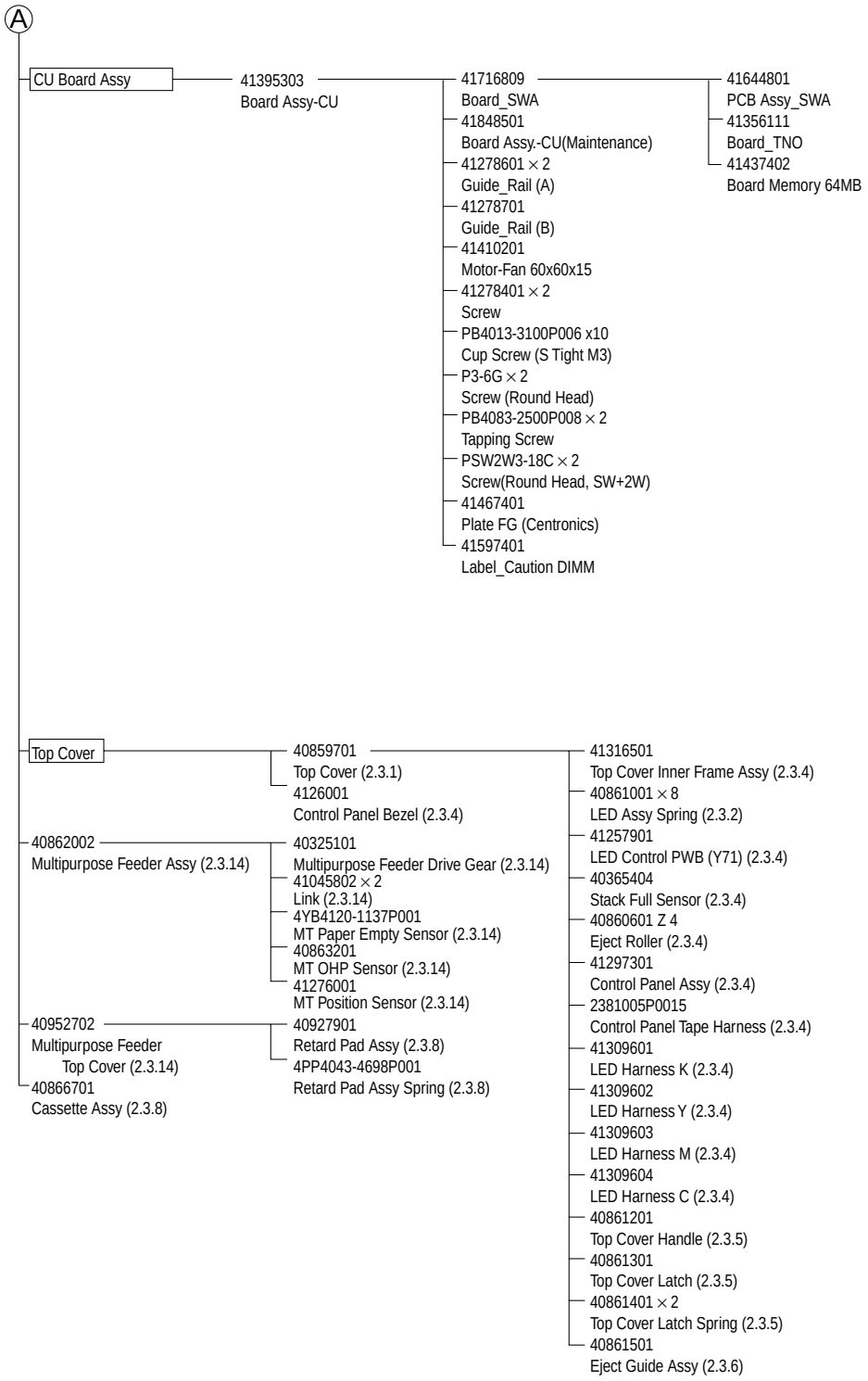
A
CU Board Assy
41395303
Board Assy-CU
41716809
Board_SWA
41644801
PCB Assy_SWA
41356111
Board_TNO
41437402
Board Memory 64MB
41848501
Board Assy.-CU(Maintenance)
41278601 × 2
Guide_Rail (A)
41278701
Guide_Rail (B)
41410201
Motor-Fan 60x60x15
41278401 × 2
Screw
PB4013-3100P006 x10
Cup Screw (S Tight M3)
P3-6G × 2
Screw (Round Head)
PB4083-2500P008 × 2
Tapping Screw
PSW2W3-18C × 2
Screw(Round Head, SW+2W)
41467401
Plate FG (Centronics)
41597401
Label_Caution DIMM
Top Cover
40859701
Top Cover (2.3.1)
4126001
Control Panel Bezel (2.3.4)
41316501
Top Cover Inner Frame Assy (2.3.4)
40861001 × 8
LED Assy Spring (2.3.2)
41257901
LED Control PWB (Y71) (2.3.4)
40365404
Stack Full Sensor (2.3.4)
40860601 Z 4
Eject Roller (2.3.4)
41297301
Control Panel Assy (2.3.4)
2381005P0015
Control Panel Tape Harness (2.3.4)
41309601
LED Harness K (2.3.4)
41309602
LED Harness Y (2.3.4)
41309603
LED Harness M (2.3.4)
41309604
LED Harness C (2.3.4)
40861201
Top Cover Handle (2.3.5)
40861301
Top Cover Latch (2.3.5)
40861401 × 2
Top Cover Latch Spring (2.3.5)
40861501
Eject Guide Assy (2.3.6)
40862002
Multipurpose Feeder Assy (2.3.14)
40325101
Multipurpose Feeder Drive Gear (2.3.14)
41045802 × 2
Link (2.3.14)
4YB4120-1137P001
MT Paper Empty Sensor (2.3.14)
40863201
MT OHP Sensor (2.3.14)
41276001
MT Position Sensor (2.3.14)
40952702
Multipurpose Feeder
Top Cover (2.3.14)
40927901
Retard Pad Assy (2.3.8)
4PP4043-4698P001
Retard Pad Assy Spring (2.3.8)
40866701
Cassette Assy (2.3.8)

### 2.3.1 Top Cover

(1) Open the Top Cover assy.

(2) Remove the nine screws ① to detach the top cover ②.

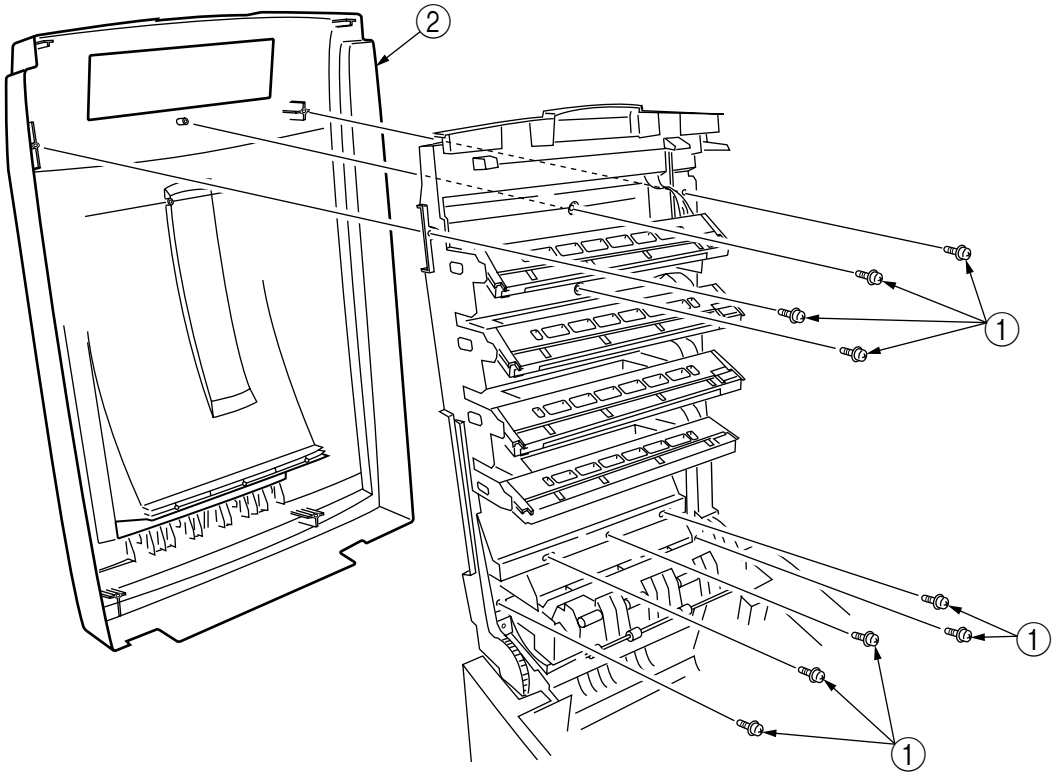


Figure 2-3-1 Top Cover

### 2.3.2 LED Assy/ LED Assy Spring

(1) Open the top cover ①.

(2) Remove the three cables, and unhook the LED Assy ② at two places to demount it (the two springs ③ become detached together with the LED Assy ②).

(3) Remove the LED connector ④.
When assembling, attach the LED connector ④ to the LED head and insert the flat cable into it.

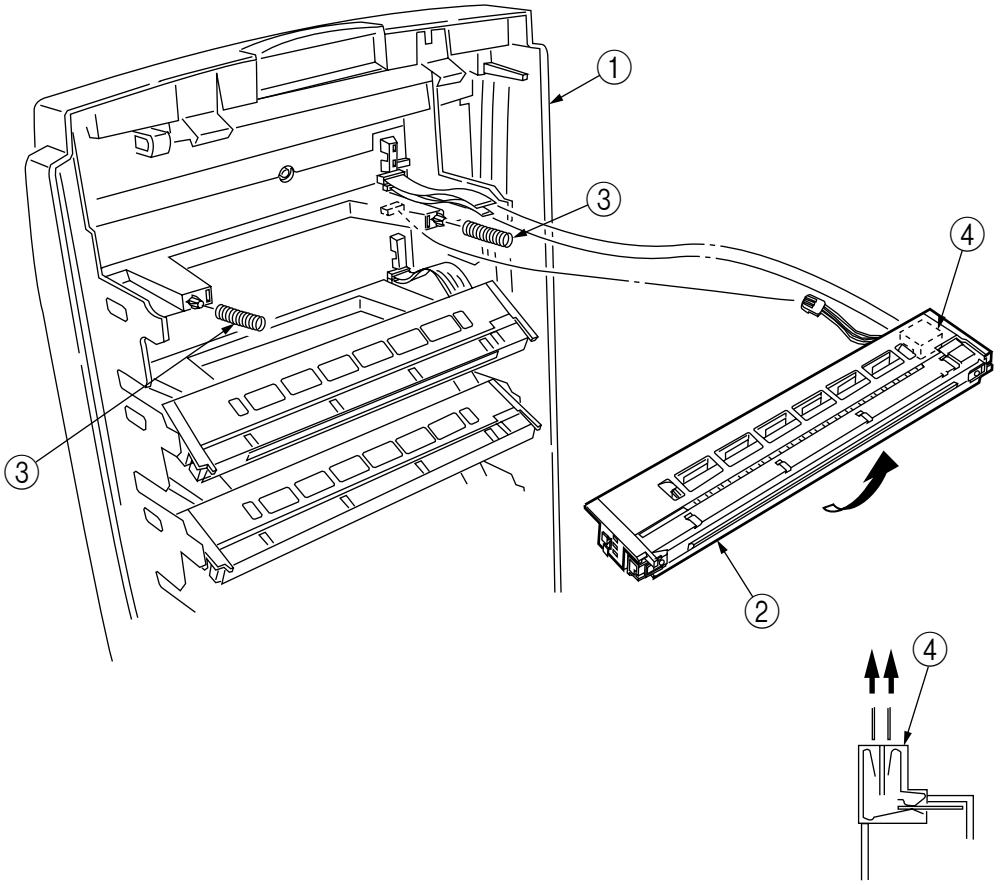


Figure 2-3-2 LED Assy/ LED Assy Spring

### 2.3.3 Top Cover Unit

(1) Remove the top cover (see section 2.3.1).
(2) Remove the rear cover (see section 2.3.10).
(3) Remove the left side cover (see section 2.3.12).
(4) Remove the right side cover (see section 2.3.13).
(5) Remove the shield plates A and B (see section 2.3.22), and unplug the connector to separate the top cover.
(6) Disengage the top cover unit ① at two places to detach it.

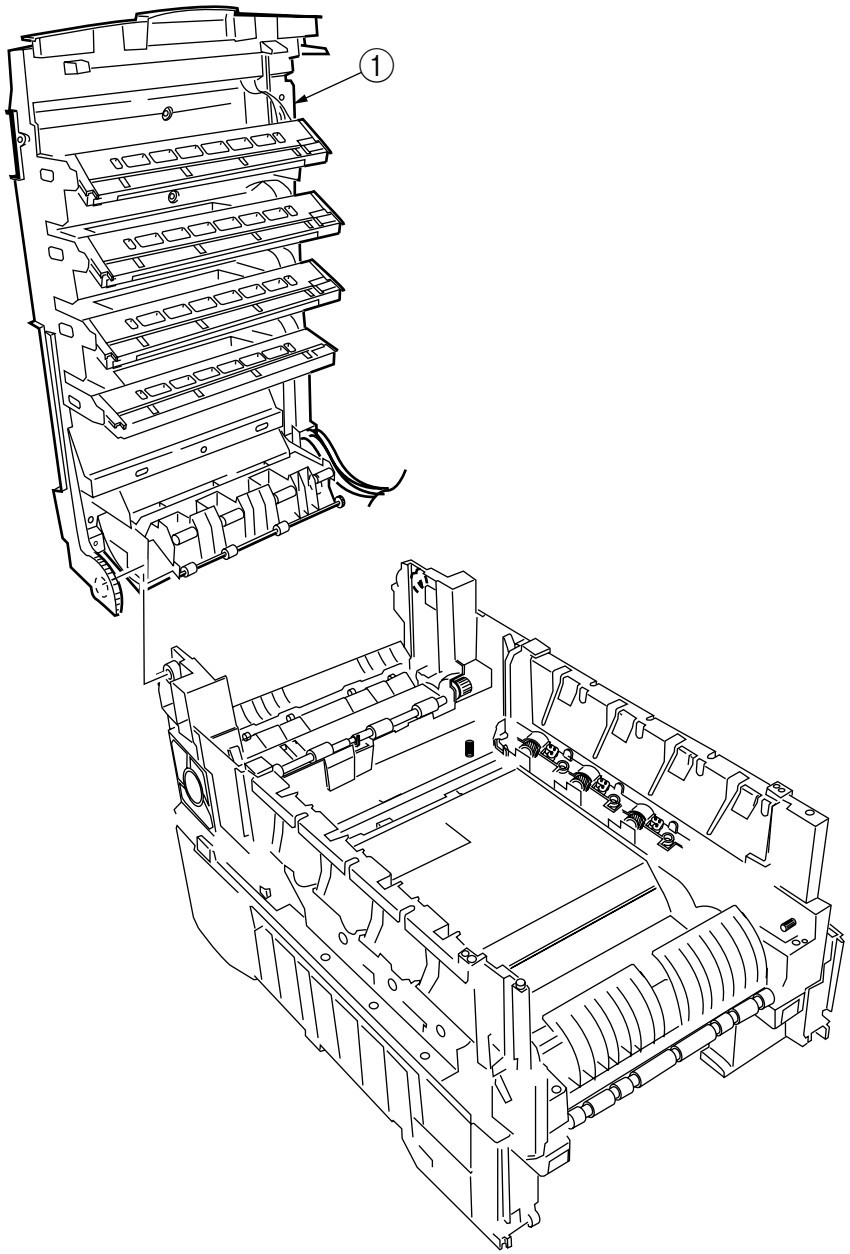


Figure 2-3-3 Top Cover Unit

2.3.4 Control Panel Assy/ Control Panel Bezel/ LED Control PWB/ Toner Sensors/ Stacker Full Sensor/ Control Panel/ Control Panel Tape Harness/ Eject Rollers

(1) Detach the control panel bezel placed in the control panel Assy ②.
(2) Remove the screw ① to demount the control panel Assy ②.
(3) Detach the control panel tape harness ⑭.
(4) Remove the top cover unit (see section 2.3.3).
(5) Unscrew the four screws ③ to remove the earth plate ④.
(6) Remove the two screws ⑤, unhook all the connectors ⑥ and demount the LED control PWB ⑦.
(7) Remove the screw ⑧.
(8) Disengage the four claws to demount the toner sensor ⑫.
(9) Demount the stacker full sensor ⑬.
(10) Demount the exit rollers ⑮.
(11) Detach the LED harnesses, K, Y, M and C ⑯.
(12) Detach the top cover inner frame Assy ⑰.

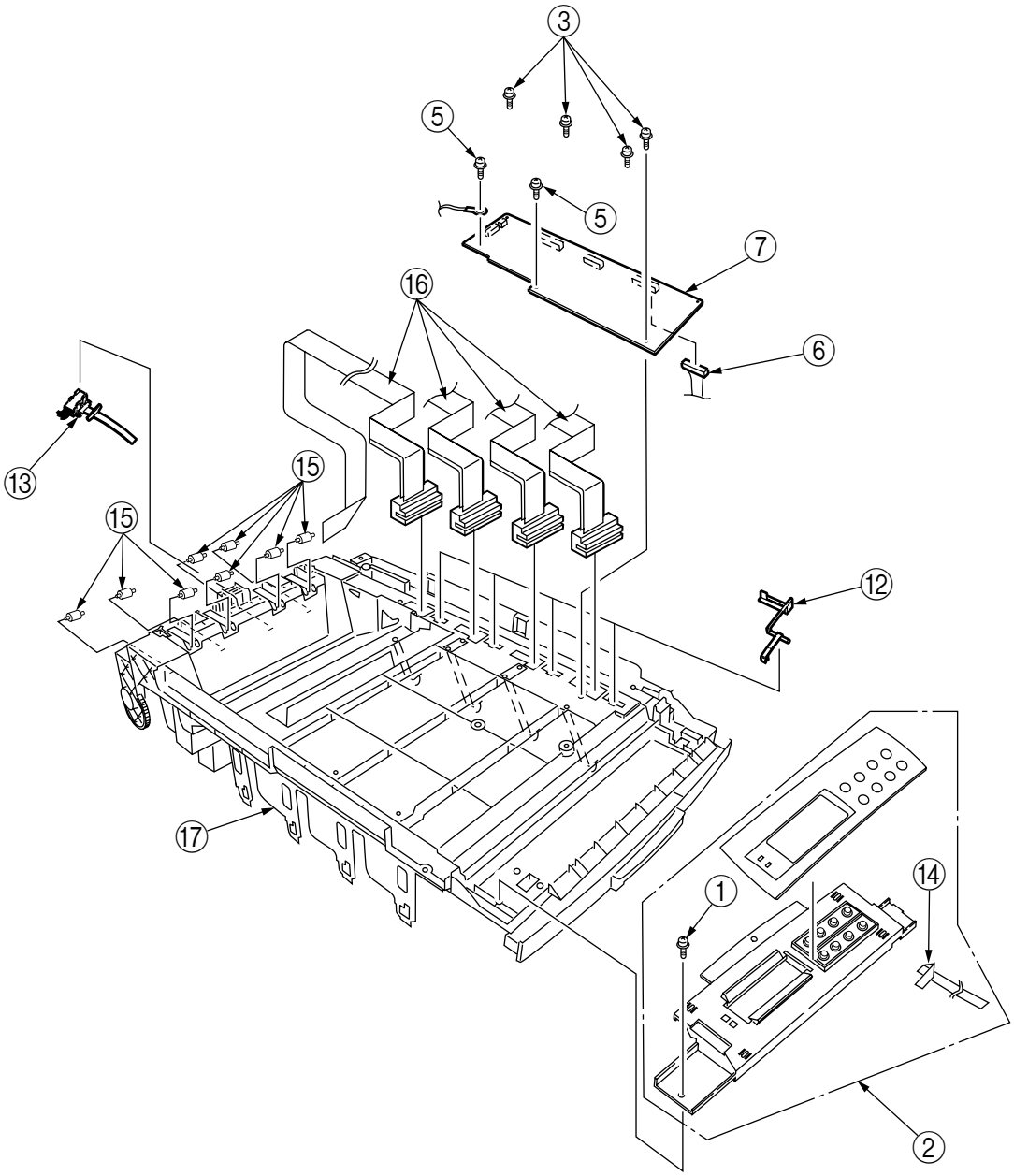


Figure 2-3-4 Control Panel Assy/ Control Panel Bezel/ LED Control PWB/ Toner Sensors/ Stacker Full Sensor/ Control Panel/ Control Panel Tape Harness/ Eject Rollers

2.3.5 Top Cover Handle/ Top Cover Latch/ Top Cover Latch Spring

(1) Remove the two screws ① to detach the top cover handle ② and disengage the top cover latch ③ (at the same time, the two top cover latch springs ④ become detached).

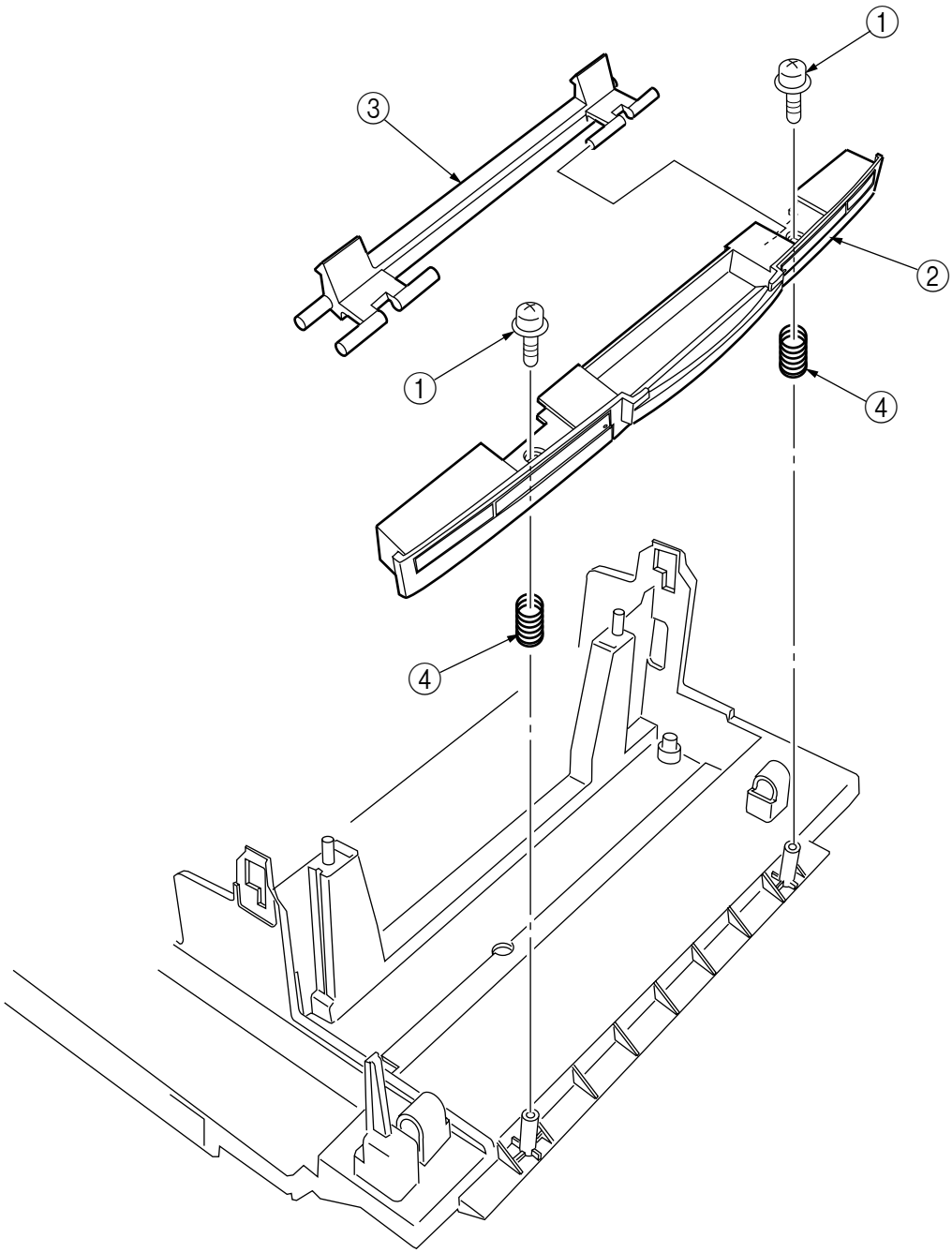


Figure 2-3-5 Top Cover Handle/ Tope Cover Latch/ Top Cover Latch Spring

2.3.6 Eject Guide Assy

(1) Remove the five screws ① to detach the eject guide Assy ②.

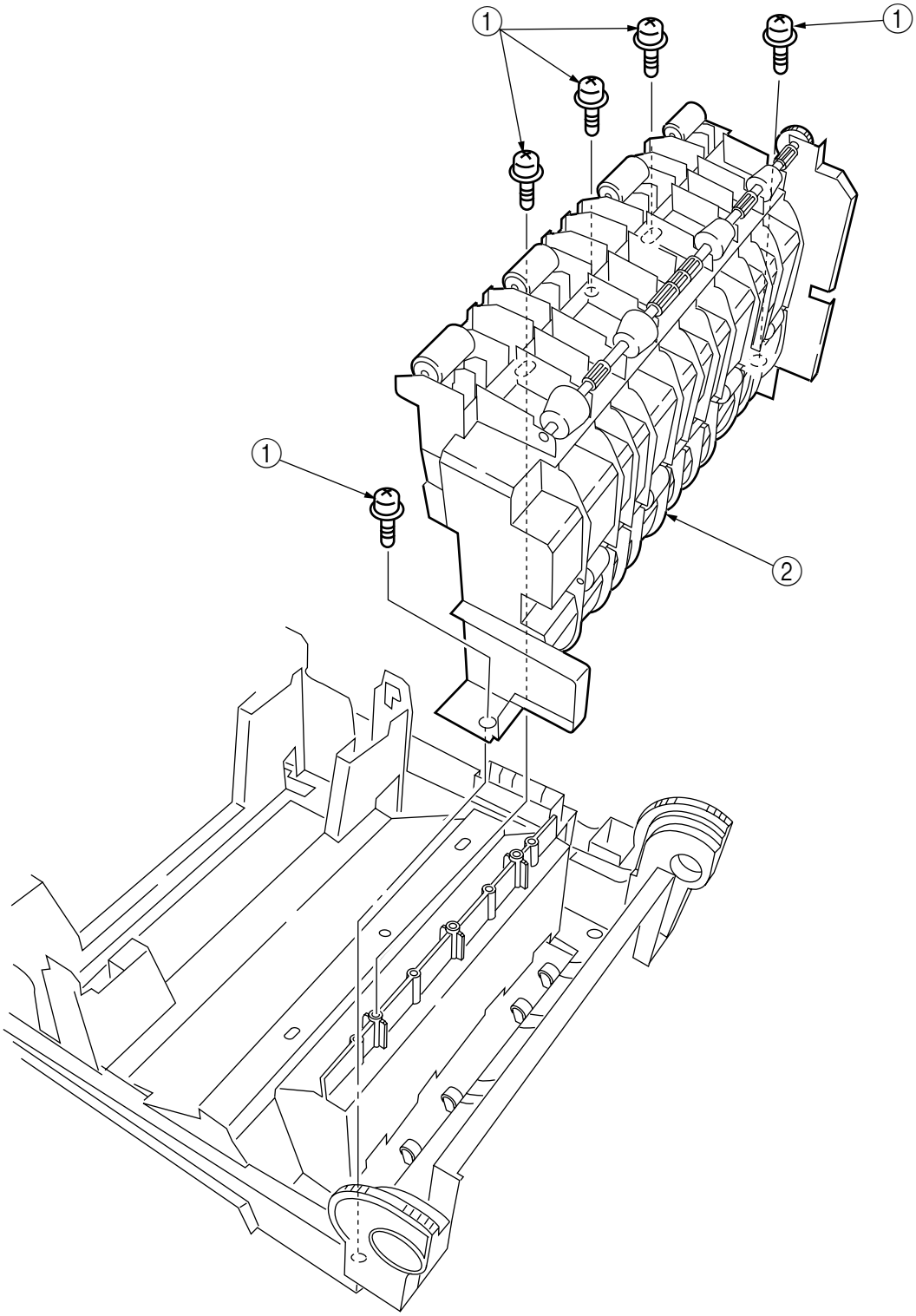


Figure 2-3-6 Eject Guide Assy

### 2.3.7 Cassette Assy/ Front Cover Assy/ Front Cover Inner Baffle

(1) Detach the cassette Assy ①.
(2) Open the front cover ②, and disengage it at two places to detach it.
(3) Detach the front cover inner baffle ③.

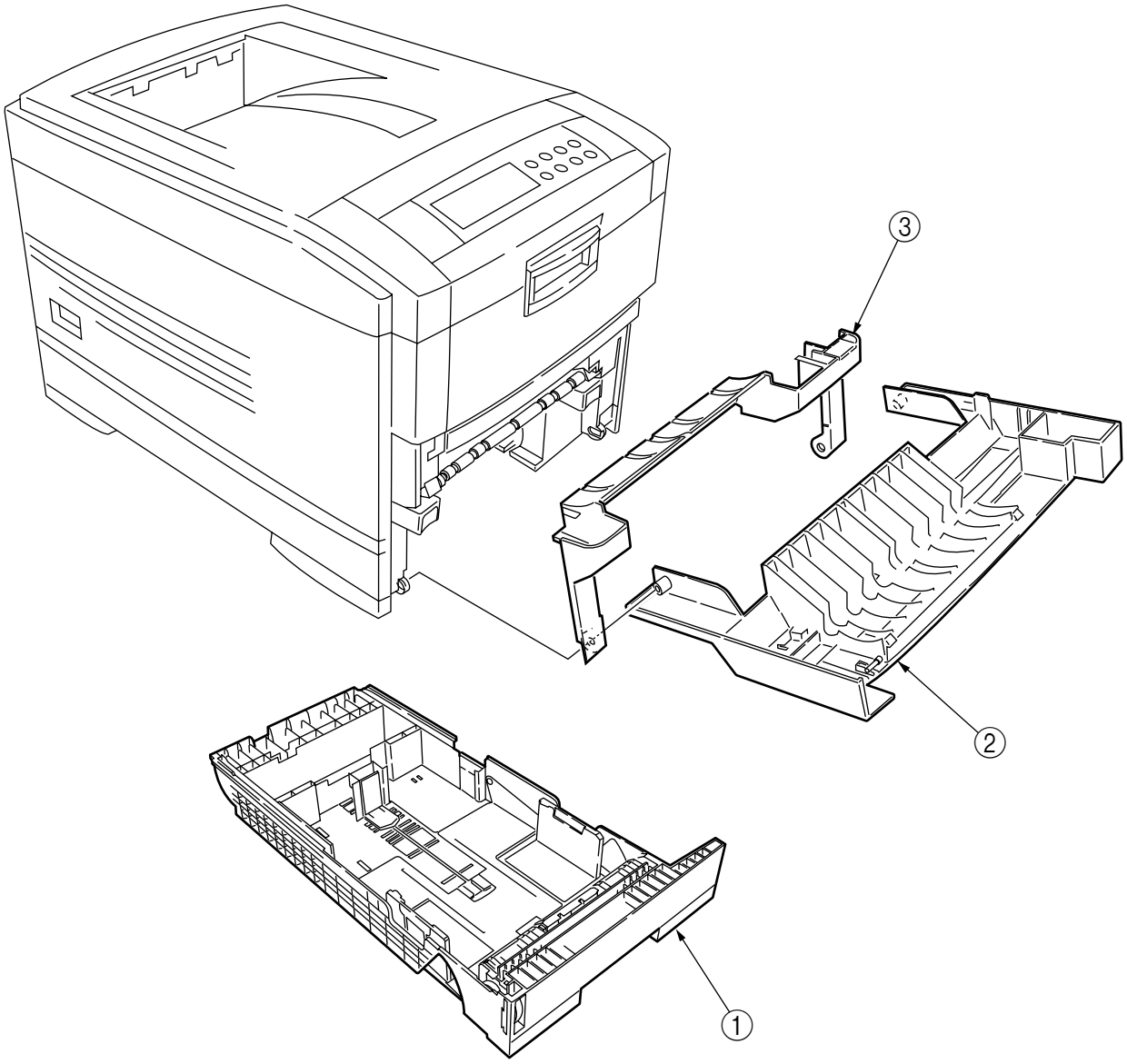


Figure 2-3-7 Cassette Assy/ Front Cover Assy/ Front Cover Inner Baffle

### 2.3.8 Retard Pad Assy/ Retard Pad Assy Spring

(1) Remove the cassette ①.

(2) Detach the retard pad Assy ② (at the same time, the spring ③ becomes detached).

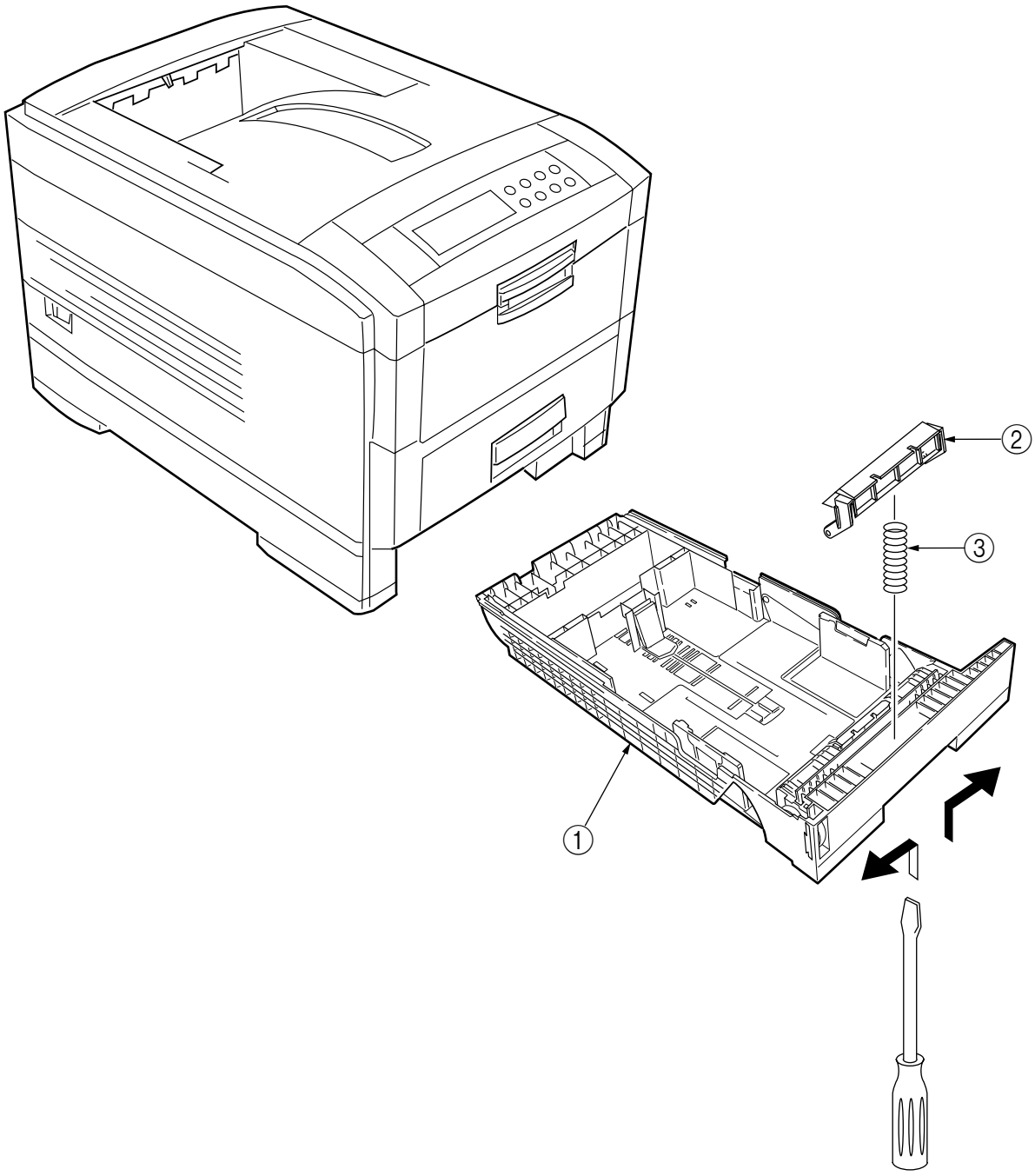


Figure 2-3-8 Retard Pad Assy/ Retard Pad Assy Spring

### 2.3.9 Feed Roller and Nudger Roller

(1) Remove the cassette.
(2) Unlatch and demount the feed roller ①.
(3) Unlatch and demount the nudger roller ②.

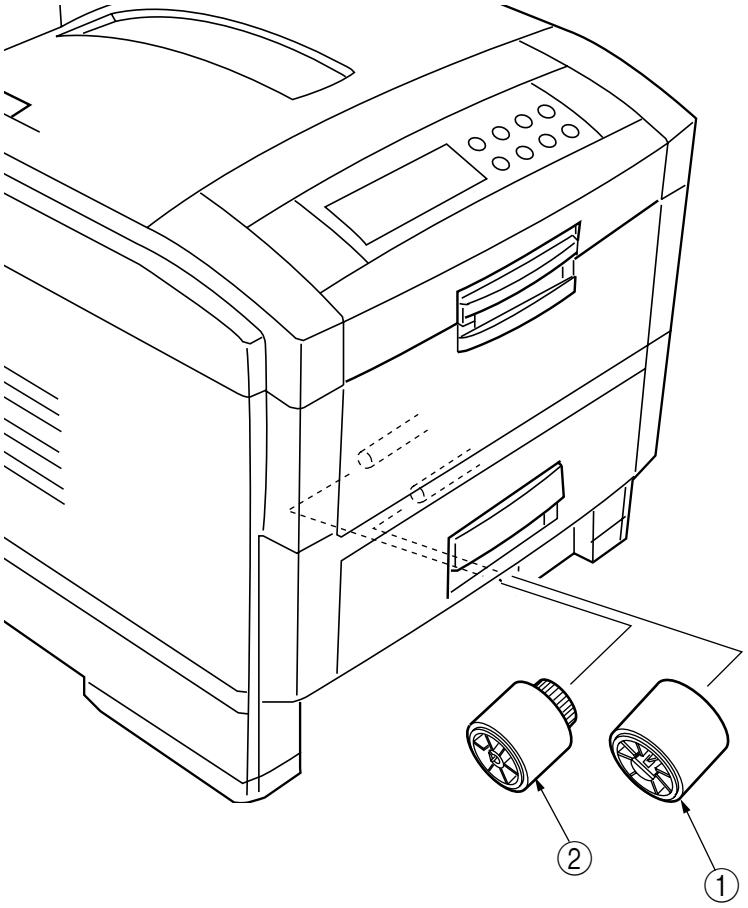


Figure 2-3-9 Feed Roller and Nudger Roller

2.3.10 Rear Cover

(1) Remove the left side cover (see section 2.3.12).
(2) Remove the four screws ② to detach the rear cover ①.

***Note!*** When attaching the rear cover, take care not to allow the spring ③ to get caught in parts.

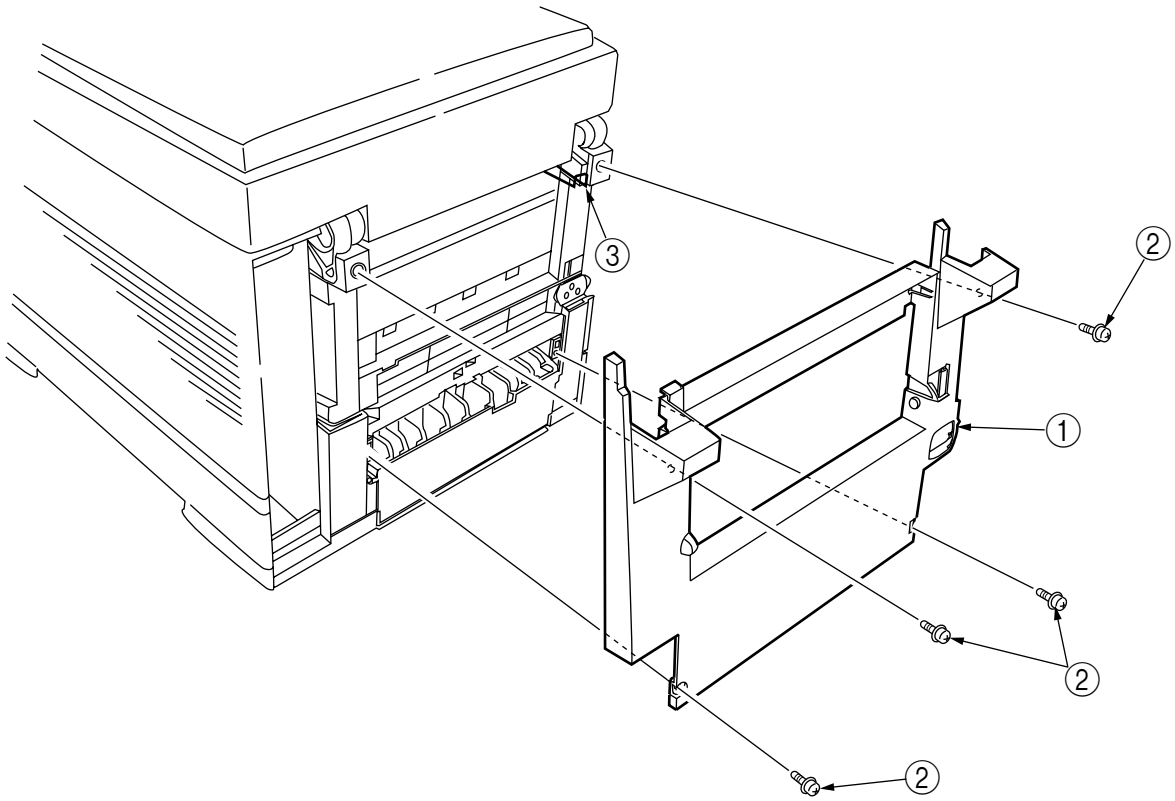


Figure 2-3-10 Rear Cover

2.3.11 Face-Up Tray

(1) Open the face-up tray ① in the arrow direction, and disengage it at two places to detach it.

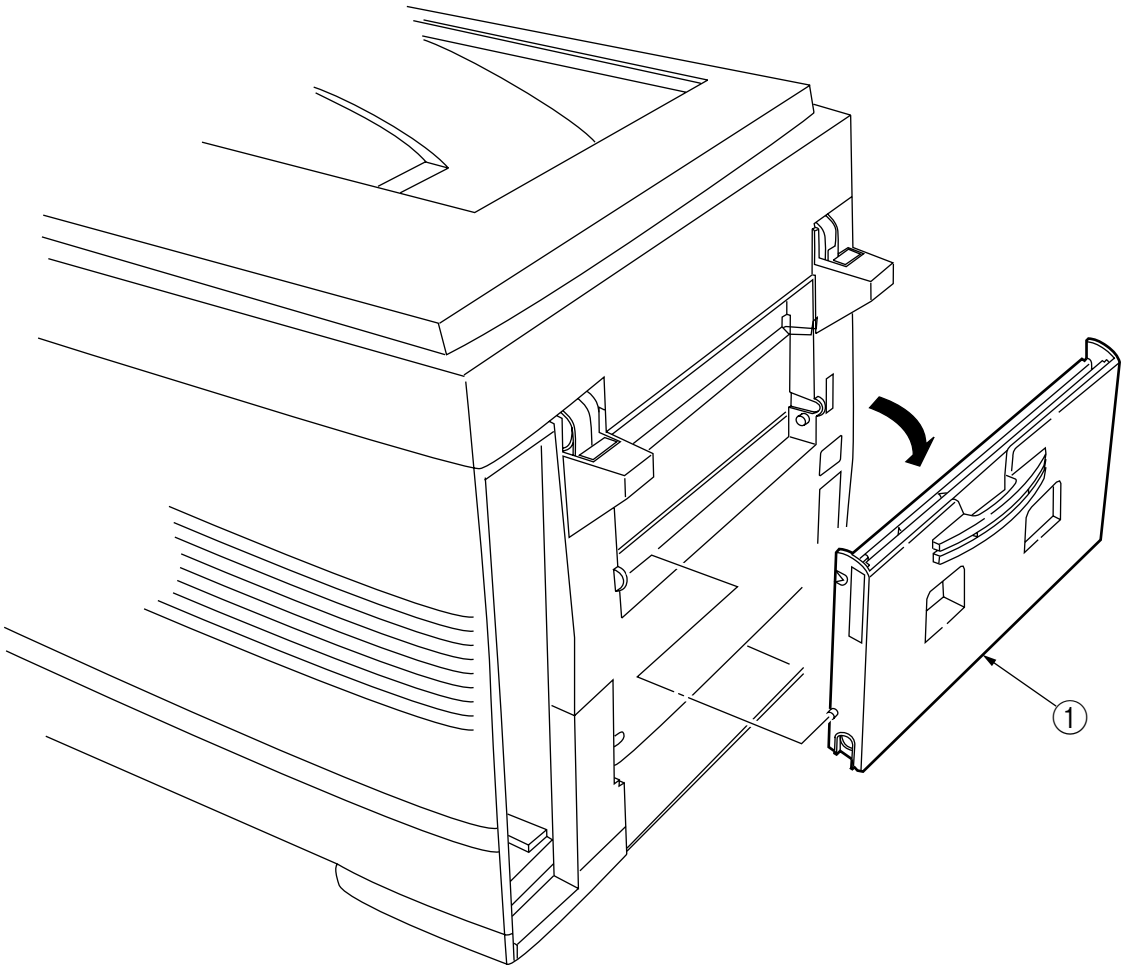


Figure 2-3-11 Face-Up Tray

### 2.3.12 Left Side Cover

(1) Open the top cover ①.
(2) Open the front cover ② and undo the screw ③.
(3) Remove the four screws ④ to detach the left side cover ⑤.

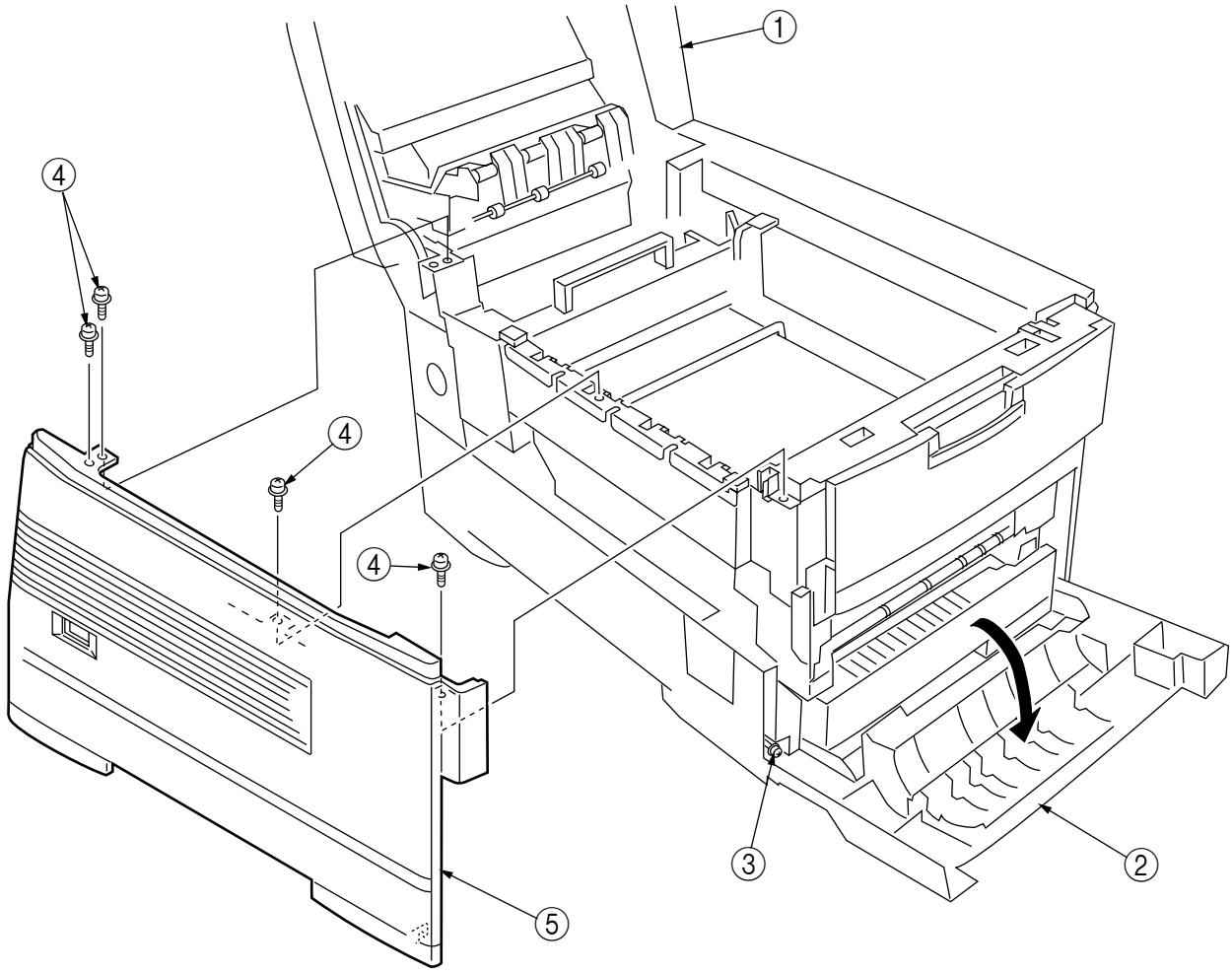


Figure 2-3-12 Left Side Cover

2.3.13 Right Side Cover

(1) Open the top cover ①.
(2) Open the front cover ② and undo the screw ③.
(2) Remove the four screws ④ to detach the right side cover ⑤.

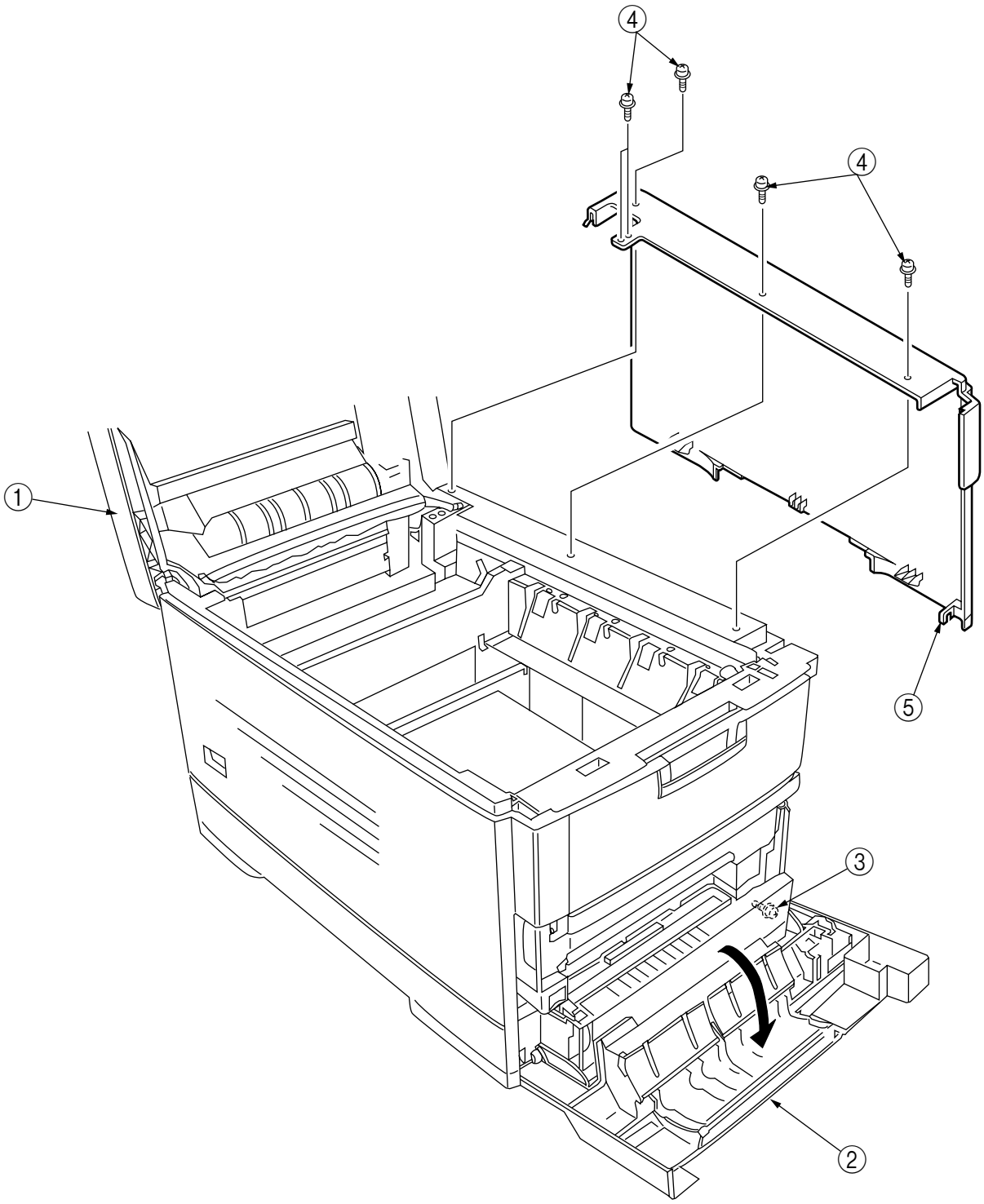


Figure 2-3-13 Right Side Cover

2.3.14 Multipurpose Tray Assy/ Multipurpose Tray Cover Assy/ Links/ Multipurpose Tray Top Cover/ Multipurpose Tray Drive Gear

(1) Remove the left side cover (see section 2.3.12).
(2) Remove the right side cover (see section 2.3.13).
(3) Remove the left plate Assy (see section 2.3.22).
(4) Remove the three screws ① to detach the multipurpose tray top cover ②.
(5) Remove the three screws ③ (two of them are black) and the connector to detach the multipurpose tray ④.
(6) Disengage Ⓐ and Ⓑ at both sides of the assembly to detach the multipurpose tray cover Assy ⑤ (at the same time, the links ⑦ become detached).
(7) Unhook and detach the multipurpose tray drive gear ⑧.

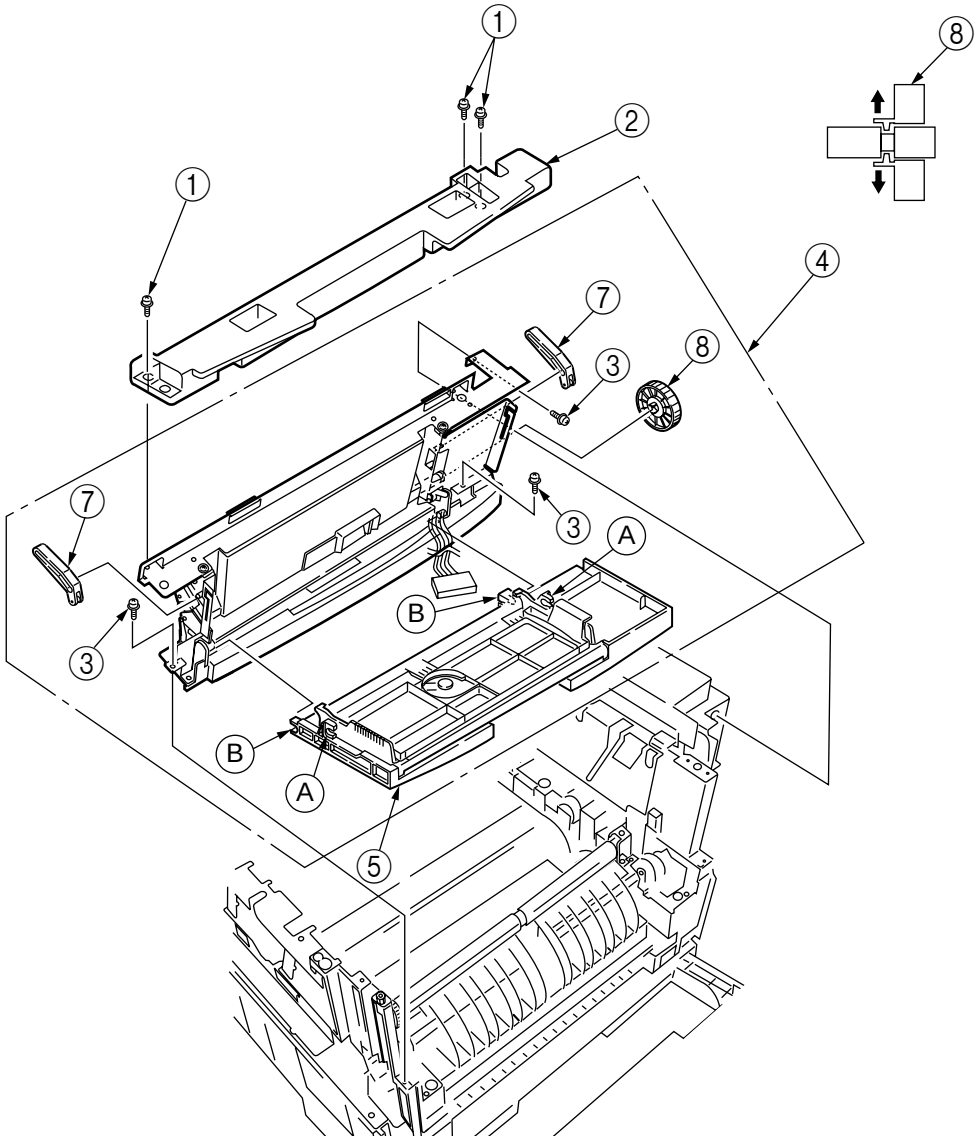


Figure 2-3-14 Multipurpose Tray Assy/ Multipurpose Tray Cover Assy/ Links/ Multipurpose Tray Top Cover/ Multipurpose Tray Drive Gear

2.3.15 Drum Contact Assys

(1) Insert a flatblade screwdriver between the printer case and the drum contact Assy ① to demount the drum contact Assy ①.

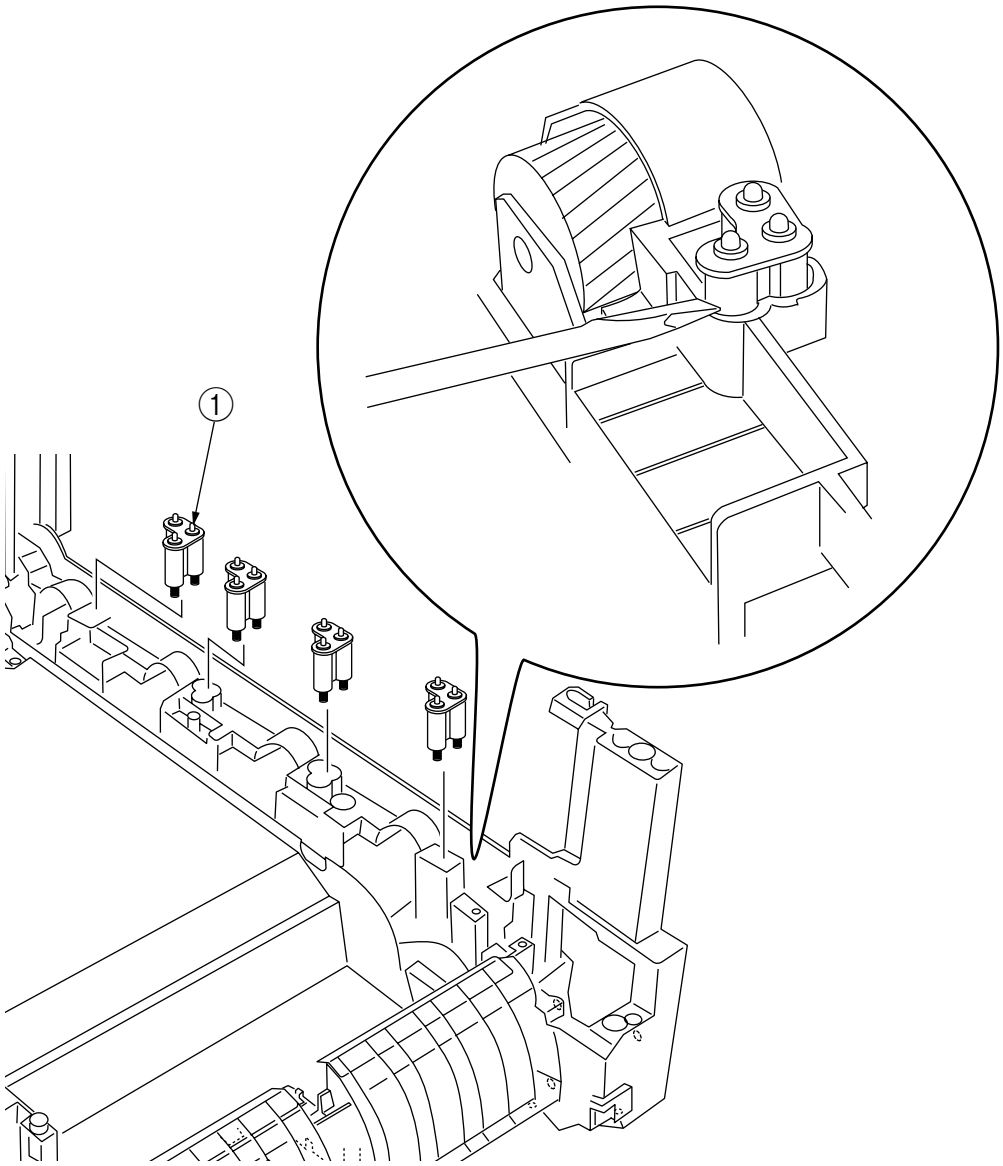


Figure 2-3-15 Drum Contact Assys

2.3.16 Registration Roller Assy (A)/ Registration Drive Gear (A)

(1) Remove the left side cover (see section 2.3.12).
(2) Remove the right side cover (see section 2.3.13).
(3) Remove the multipurpose tray (see section 2.3.14).
(4) Remove the four screws ① to demount the registration roller Assy (A) ②.
(5) Remove the E ring ③ to detach the registration gear (A) ④.

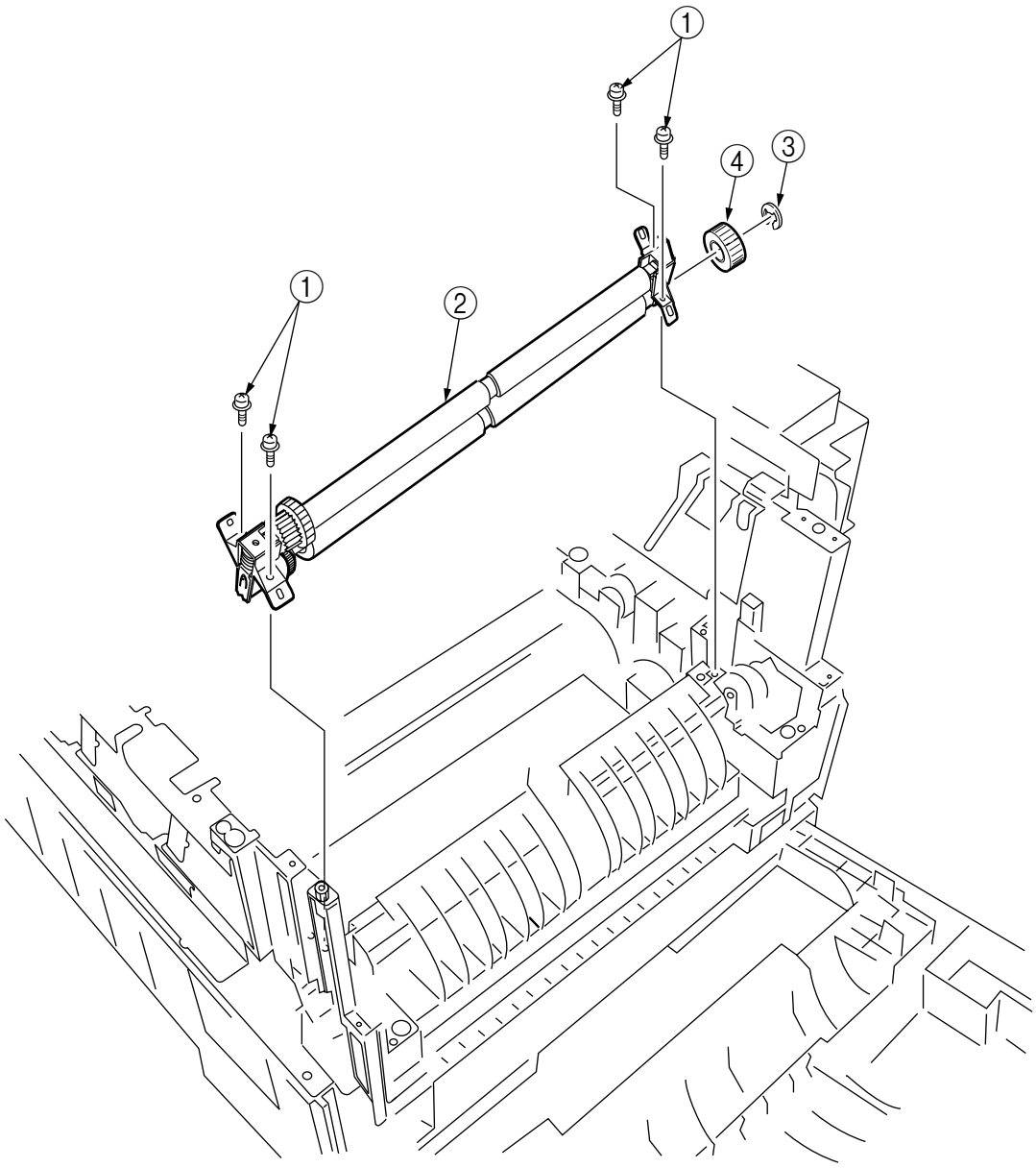


Figure 2-3-16 Registration Roller Assy (A)/ Registration Driver Gear (A)

2.3.17 Registration Roller Assy (B)

(1) Remove the cassette Assy.
(2) Open the front cover.
(3) Remove the right side cover (see section 2.3.13).
(4) Remove the left plate Assy (see section 2.3.22).
(5) Remove the registration clutch (see section 2.3.18).
(7) Unscrew the four screws ①, and pull out the registration Assy (B) ① in the arrow direction.

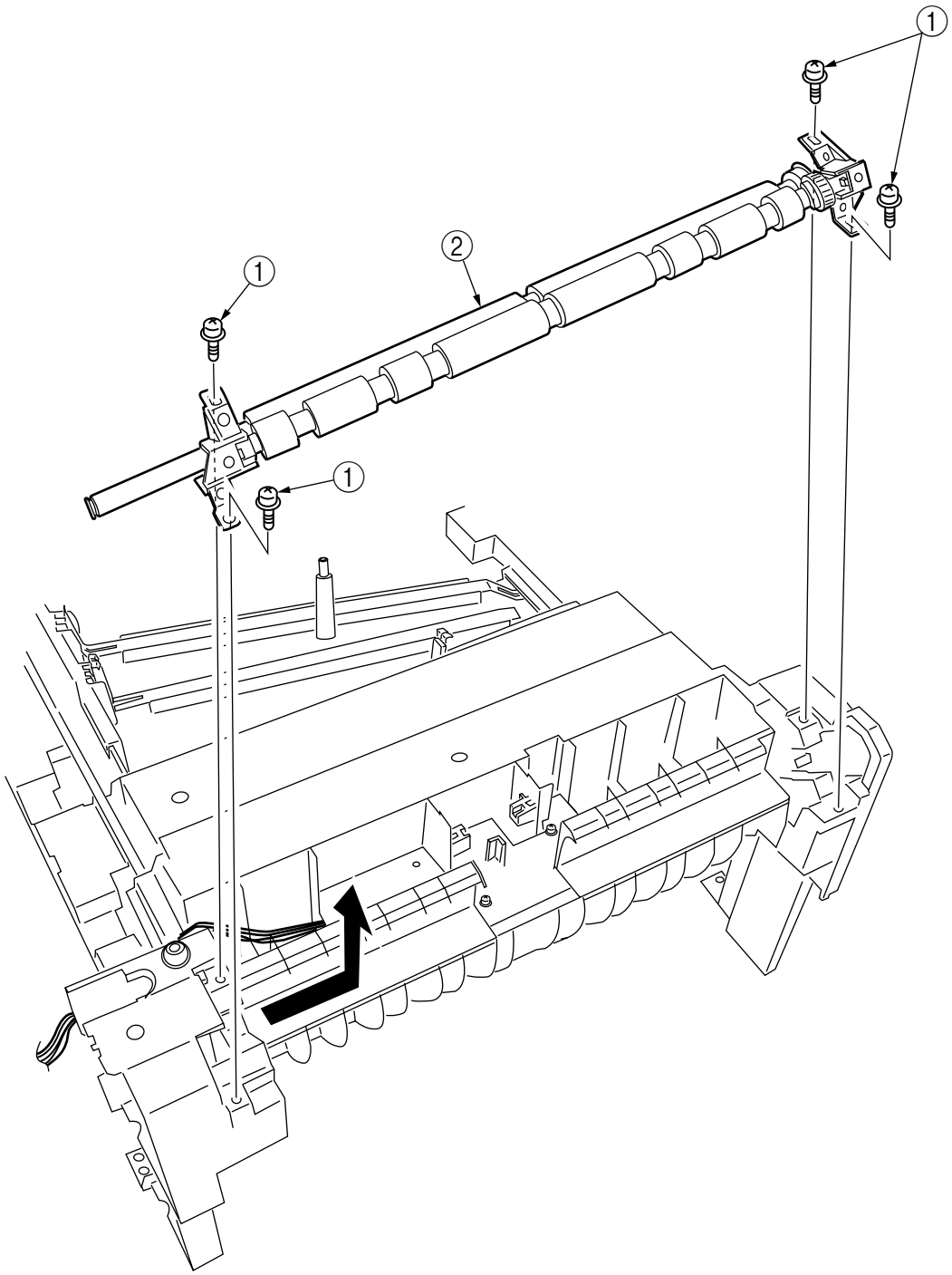


Figure 2-3-17 Registration Roller Assy (B)

2.3.18 Registration Clutch and Registration Motor Assy

(1) Remove the left side cover (see section 2.3.12).
(2) Remove the left plate Assy (see section 2.3.22).
(3) Remove the connector and the E ring ①, then remove the two screws ③, the earth ④ and the registration clutch ②.
(4) Remove the connector to remove the two screws ⑤ and the registration motor Assy ⑥.

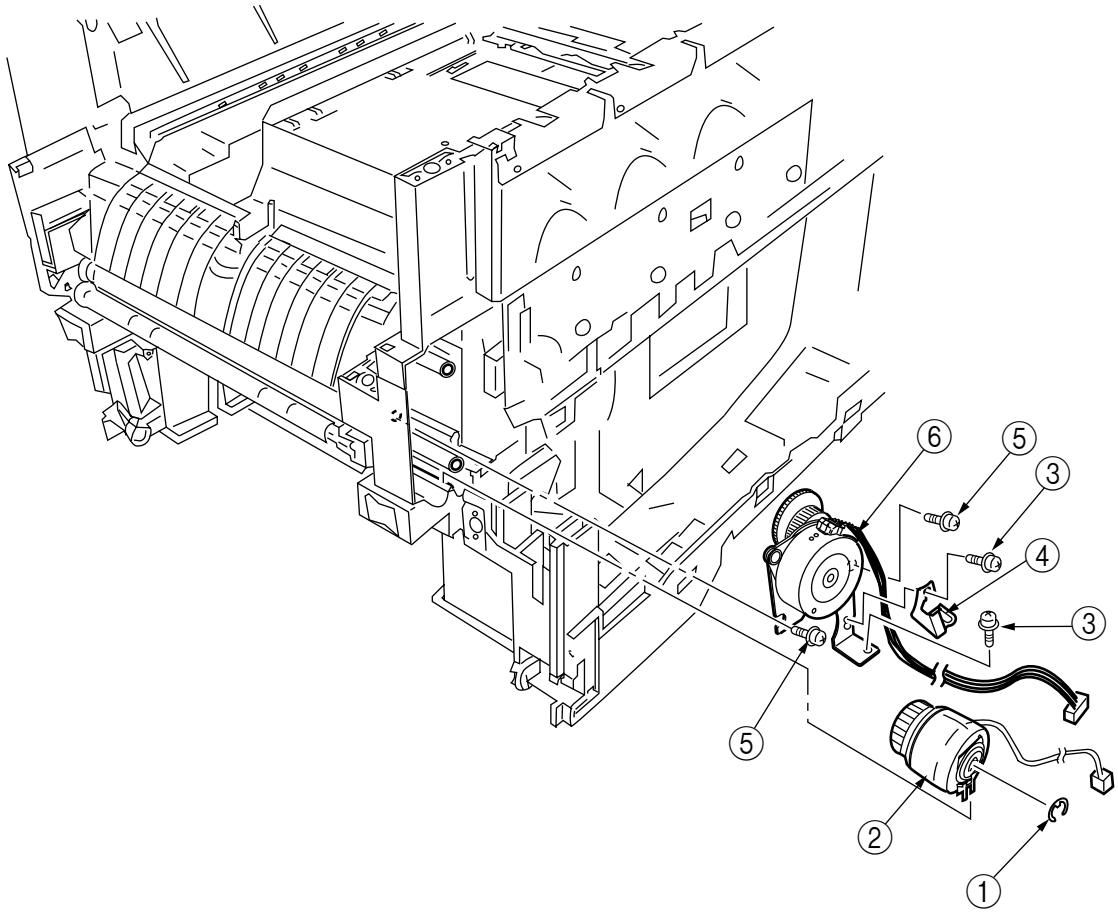


Figure 2-3-18 Registration Clutch and Registration Motor Assy

2.3.19 Main Cooling Fan

(1) Unhook the connector (1), and remove the screw (2) and the cooling fan (3).

***Note!*** When attaching the cooling fan, observe its correct orientation.

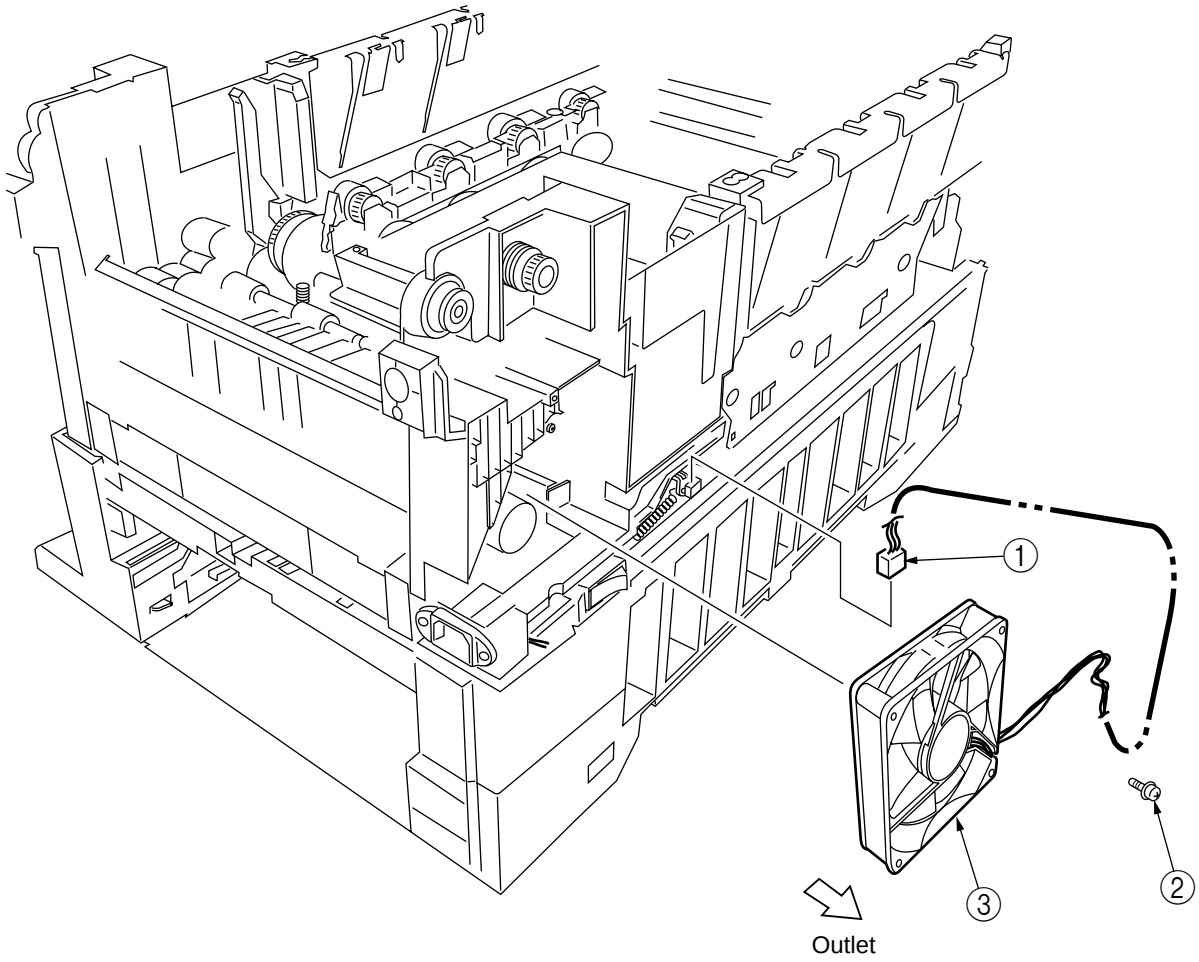


Figure 2-3-19 Main Cooling Fan

2.3.20 Color Registration Sensor Assy

(1) Remove the two screws ① and the two connectors to demount the color registration sensor Assy ②.

(2) Remove the earth plate B ③.

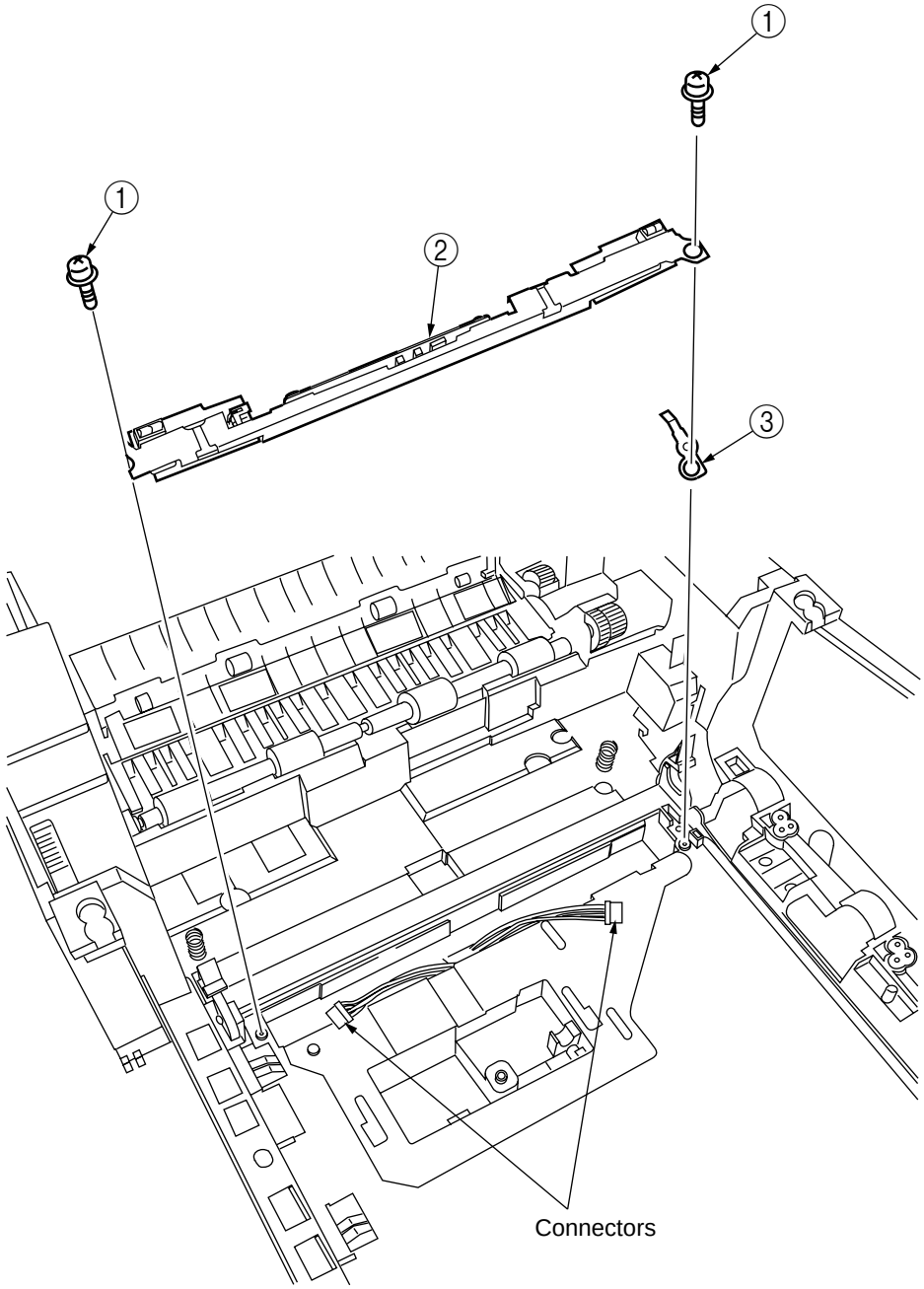


Figure 2-3-20 Color Registration Sensor Assy

2.3.21 Duplex Guide Assy

(1) Unlatch and demount the duplex guide ①.

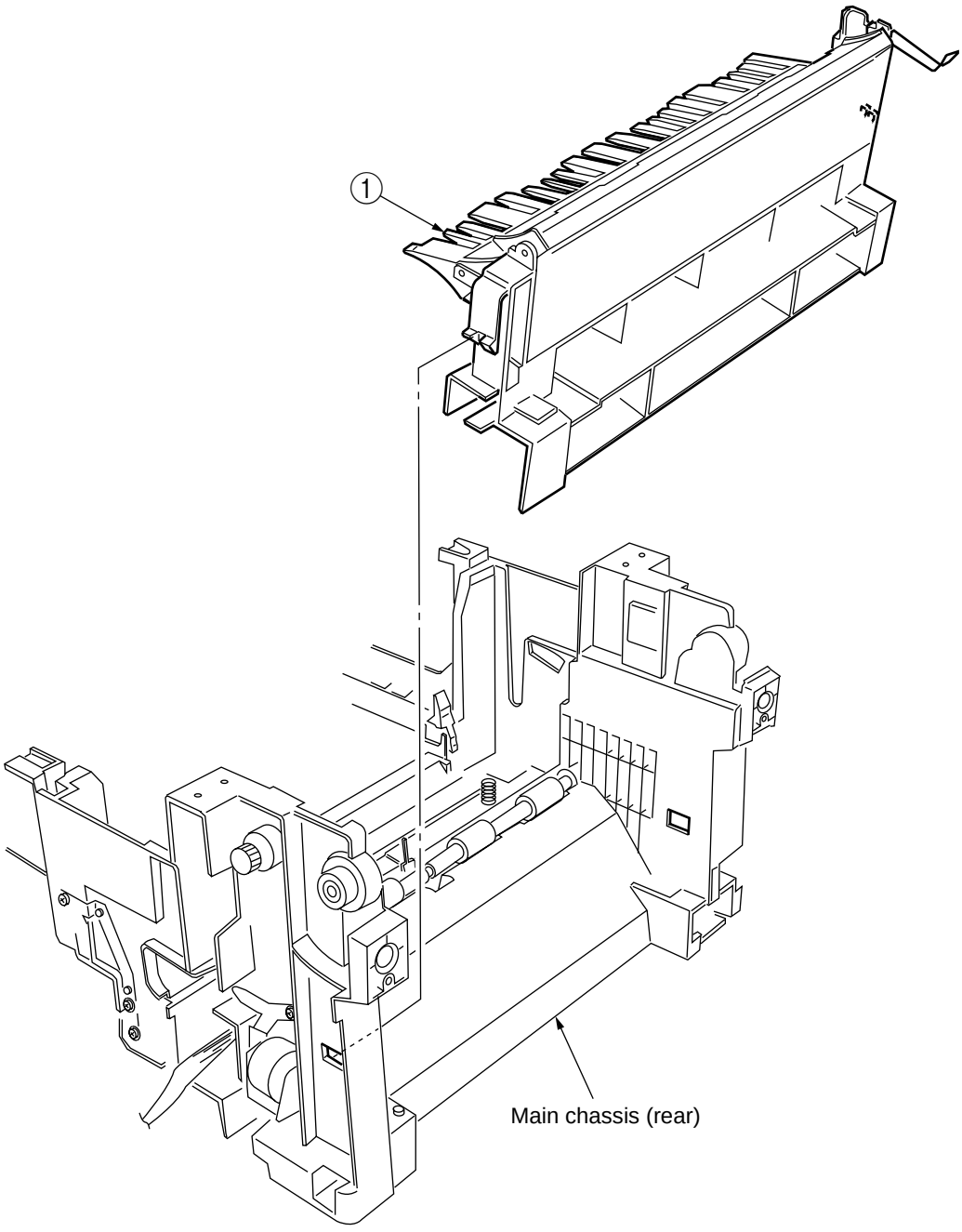


Figure 2-3-21 Duplex Guide Assy

2.3.22 Electrical Chassis Cooling Fan

(1) Unscrew the four screws ① to remove the plate A ②.
(2) Unscrew the four screws ③ to remove the shield plate B ④.
(3) Remove the printer engine controller PWB (see section 2.3.30).
(4) Unscrew the eleven screws ⑤ to remove the shield plate ⑥.
(5) Unscrew the two screws ⑦ to demount the electrical chassis cooling fan ⑧.

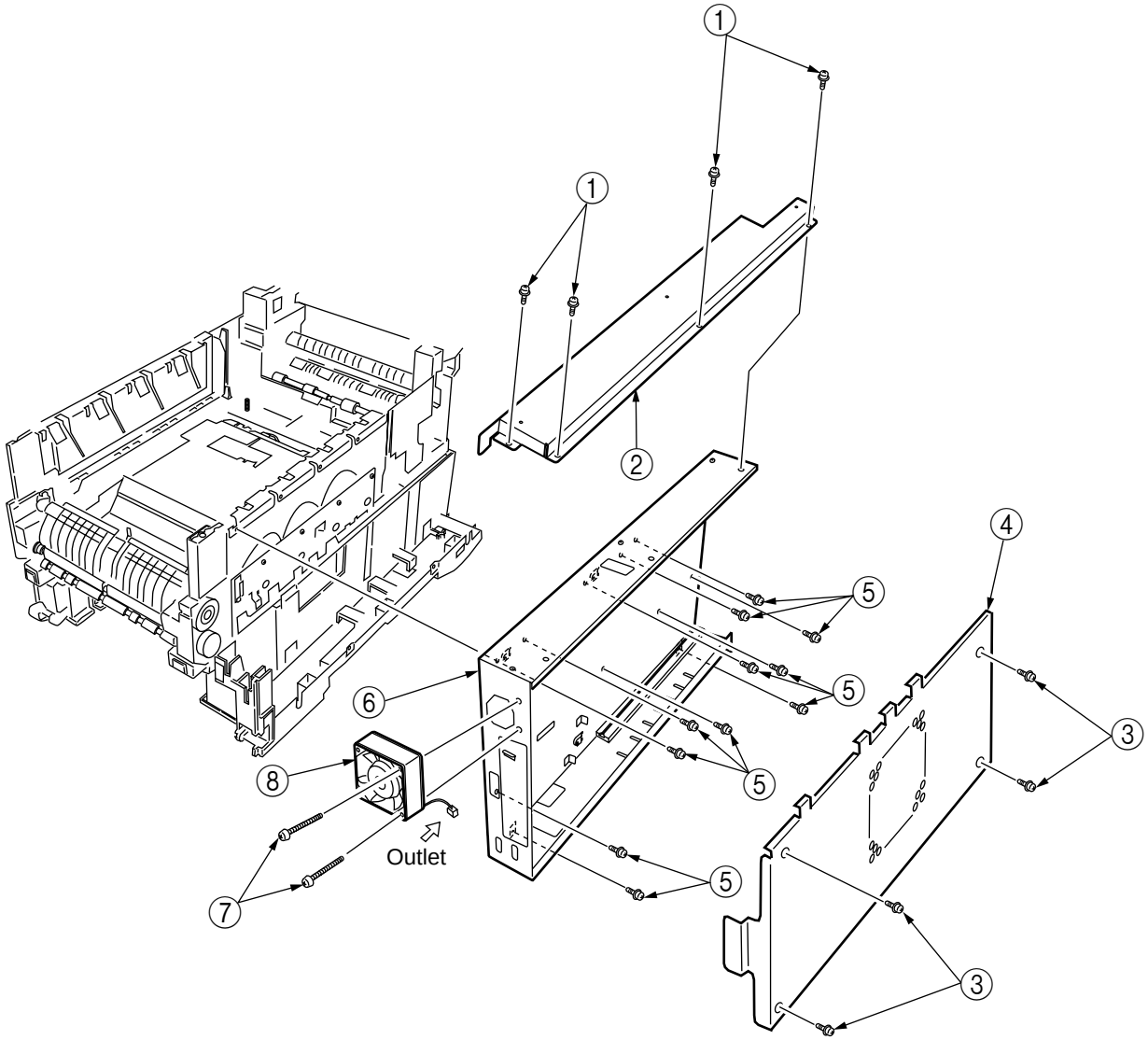


Figure 2-3-22 Electrical Chassis Cooling Fan

2.3.23 Printer Engine Controller PWB

(1) Remove the right side cover (see section 2.3.13).
(2) Remove the left plate Assy (see section 2.3.22).
(3) Remove the five screws ① and all the connectors to demount the printer engine controller PWB ②.

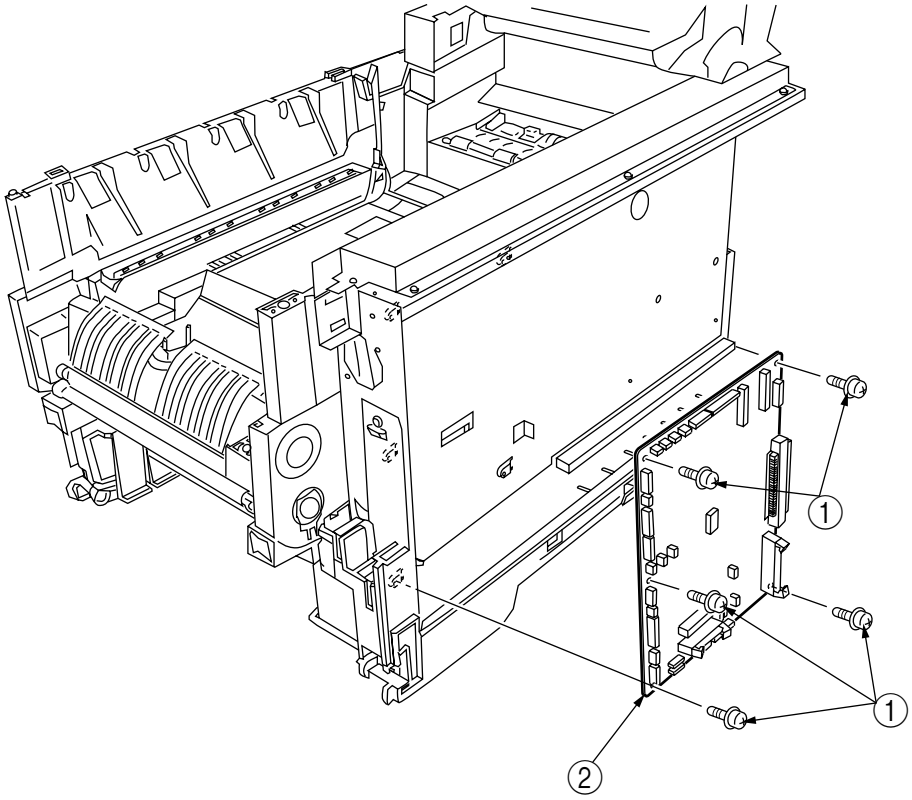


Figure 2-3-23 Printer Engine Controller PWB

2.3.24 Printer Unit Chassis

(1) Unscrew the two screws ① and remove the AC inlet ②.
(2) Unscrew the four black screws ③ and five screws ④ to detach the printer unit chassis ⑤.
(3) Unscrew the four black screws ⑥ and remove the left top cover spring Assy ⑦.
(4) Unscrew the four black screws ⑧ and remove the right top cover spring Assy ⑨.

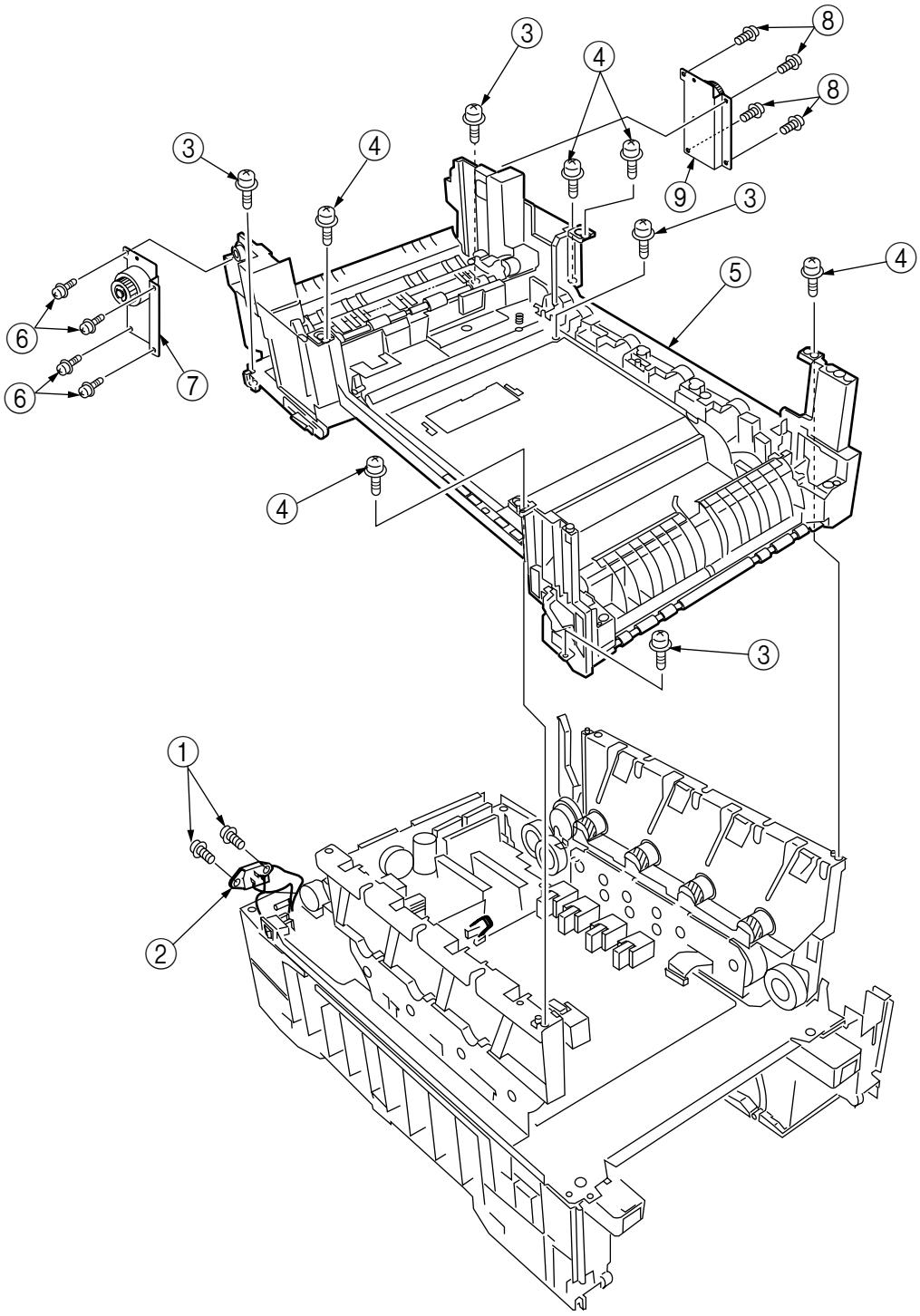


Figure 2-3-24 Pinter Unit Chassis

2.3.25 Entrance Cassette Sensor Actuator

(1) Remove the printer unit chassis (see section 2.3.24).
(2) Turn over the main chassis.
(3) Remove the two clamps with tweezers to demount the entrance cassette sensor actuator ①.

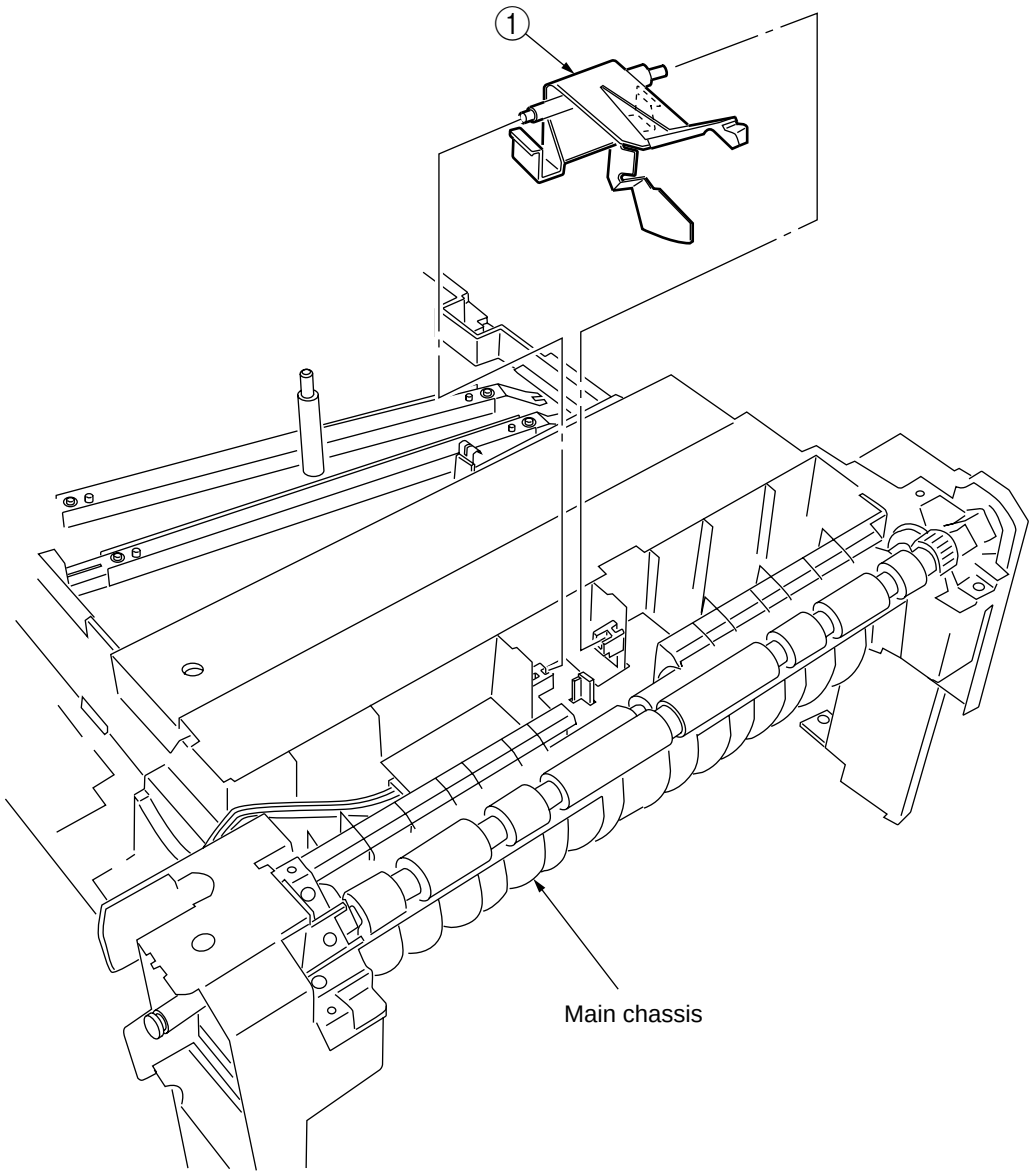


Figure 2-3-25 Entrance Cassette Sensor Actuator

2.3.26 Entrance Sensor PWB

(1) Remove the registration roller Assy (B) (see section 2.3.17).

(2) Remove the two screws ① to demount the entrance sensor PWB ②.

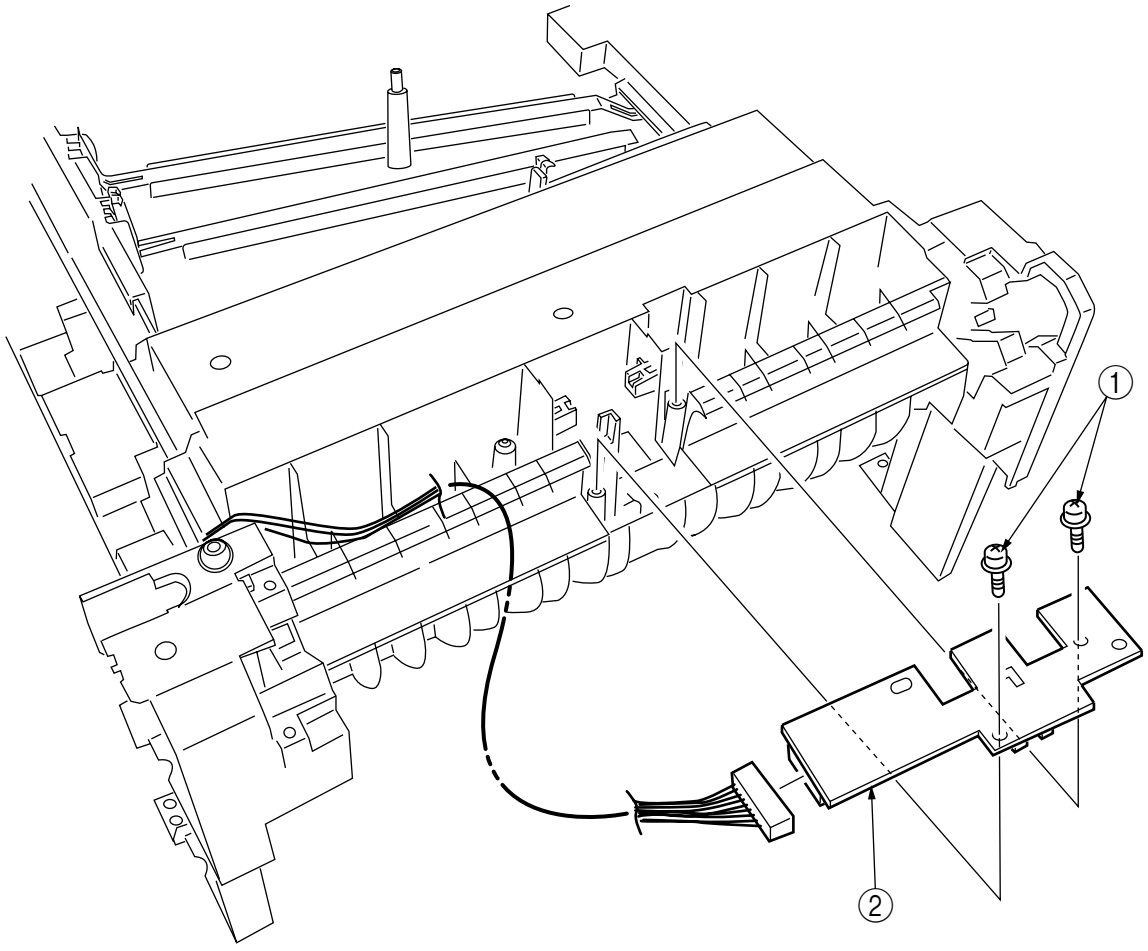


Figure 2-3-26 Entrance Sensor PWB

2.3.27 Entrance MT Sensor Actuator and Entrance Belt Sensor Actuator

(1) Remove the entrance sensor PWB (R71) (see section 2.3.26).
(2) Unlatch and detach the entrance MT sensor actuator ①.
(3) Unlatch and detach the entrance belt actuator ②.

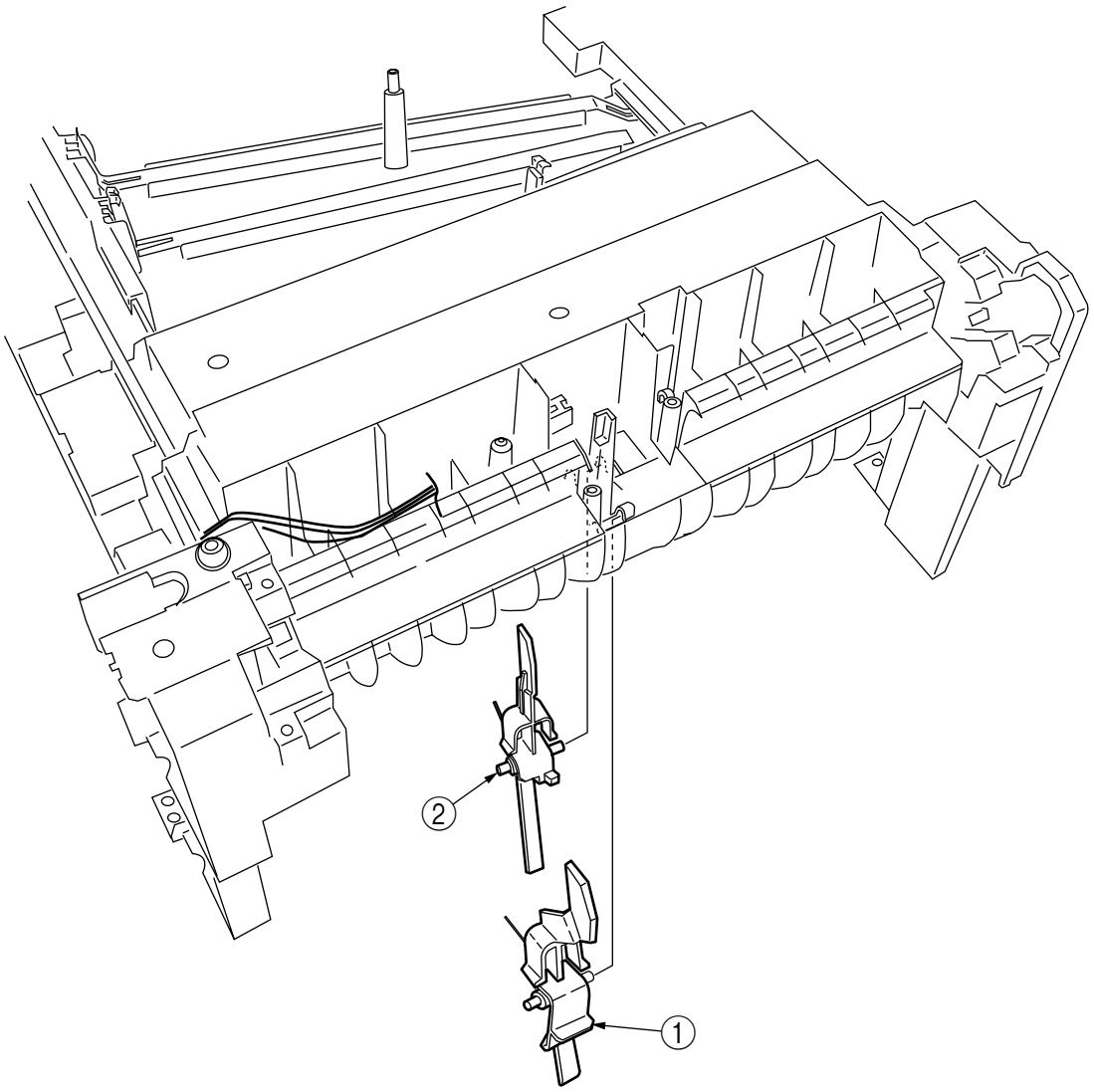


Figure 2-3-27 Entrance MT Sensor Actuator and Entrance Belt Sensor Actuator

2.3.28 Fuser Exit Roller

(1) Unscrew the two screws ① to remove the duplex gate solenoid Assy ②.
(2) Unscrew the screw ③ to remove the fuser exit roller contact ④.
(3) Remove the fuser drive gear -A ⑤ and fuser drive gear -A ⑥.
(4) Unscrew the screw ⑦ to remove the fuser drive gear -C ⑧.
(5) Unlatch and detach the fuser drive gear -B ⑨ and fuser exit roller bush (R) ⑩.
(6) Unlatch and detach the fuser exit roller bush (L) ⑪ and fuser exit roller ⑫.

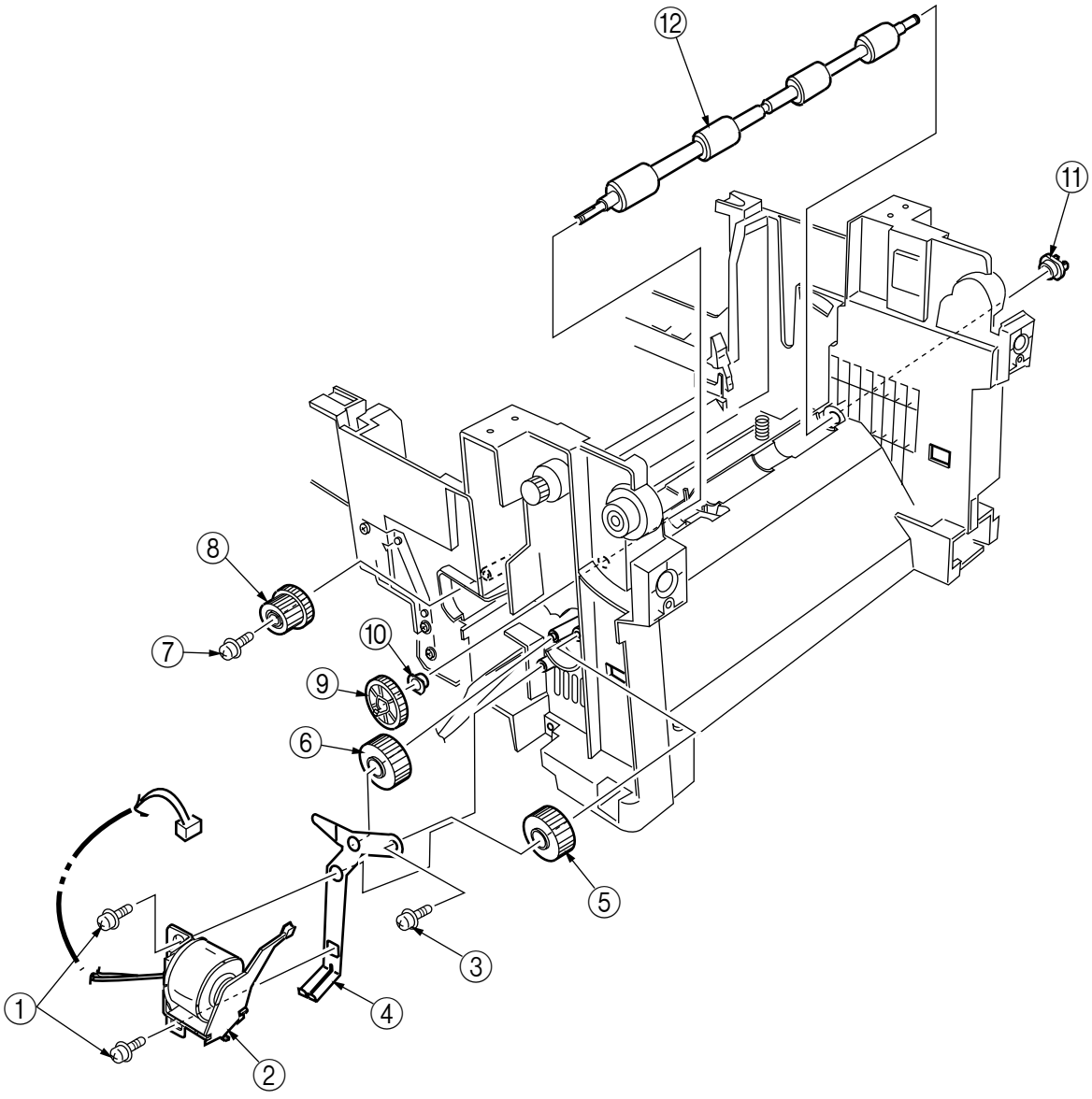


Figure 2-3-28 Fuser Exit Roller

2.3.29 Exit Sensor Assy

(1) Remove the fuser exit roller (see section 2.3.28).

(2) Remove the screw ① and connector to demount the (red and blue) exit sensor Assy ②.

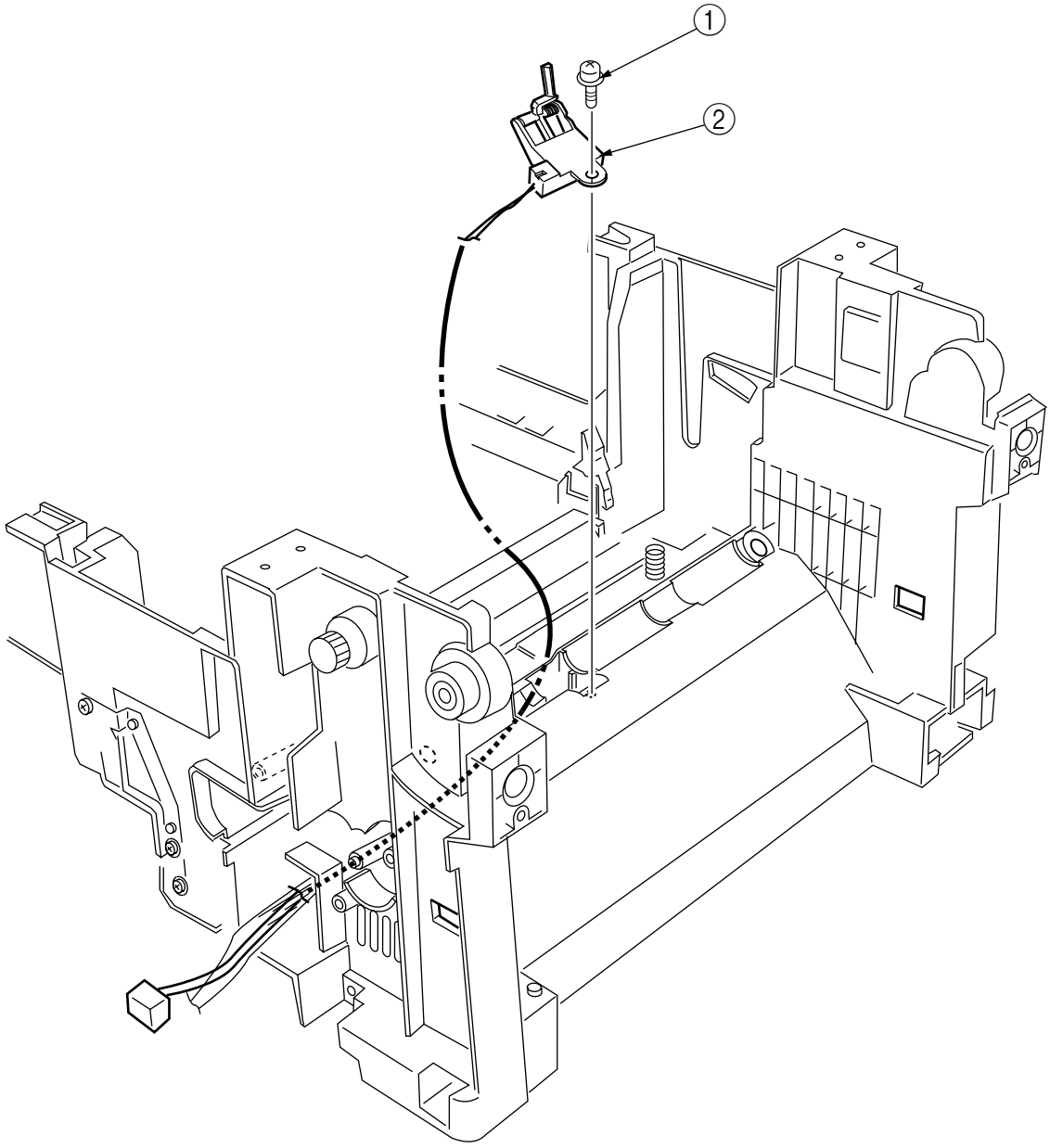


Figure 2-3-29 Exit Sensor Assy

2.3.30 Fuser Latching Handle (L)

(1) Remove the latching handle spring ①.

(2) Unscrew the screw ② to detach the fuser latching handle (L) ③.

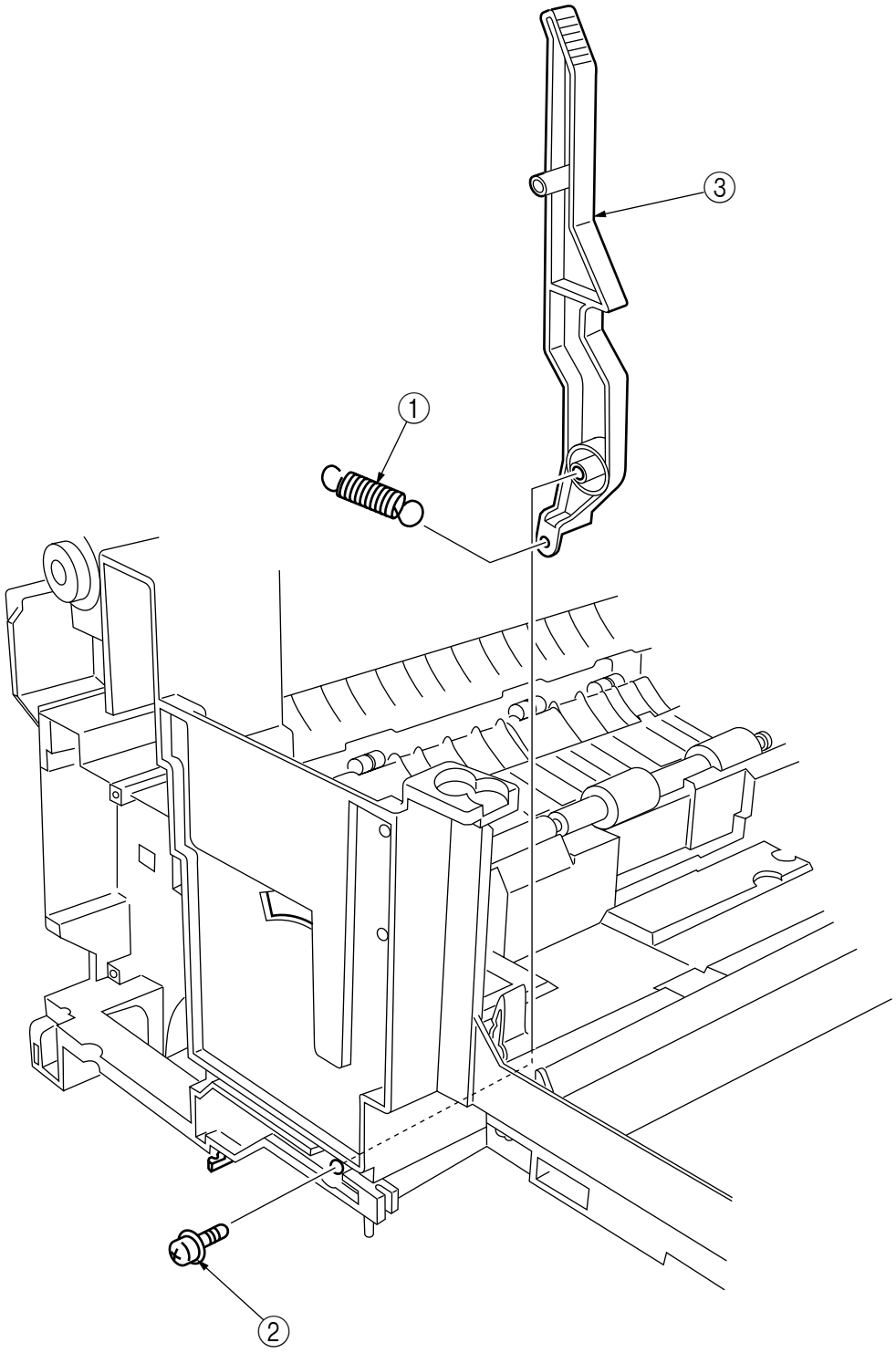


Figure 2-3-30 Fuser Latching Handle (L)

2.3.31 Belt Motor Assy

(1) Remove the fuser latching handle (R) (see section 2.3.32).
(2) Remove the two screws ① to detach the two connectors ②.
(3) Demount the belt motor Assy ③.

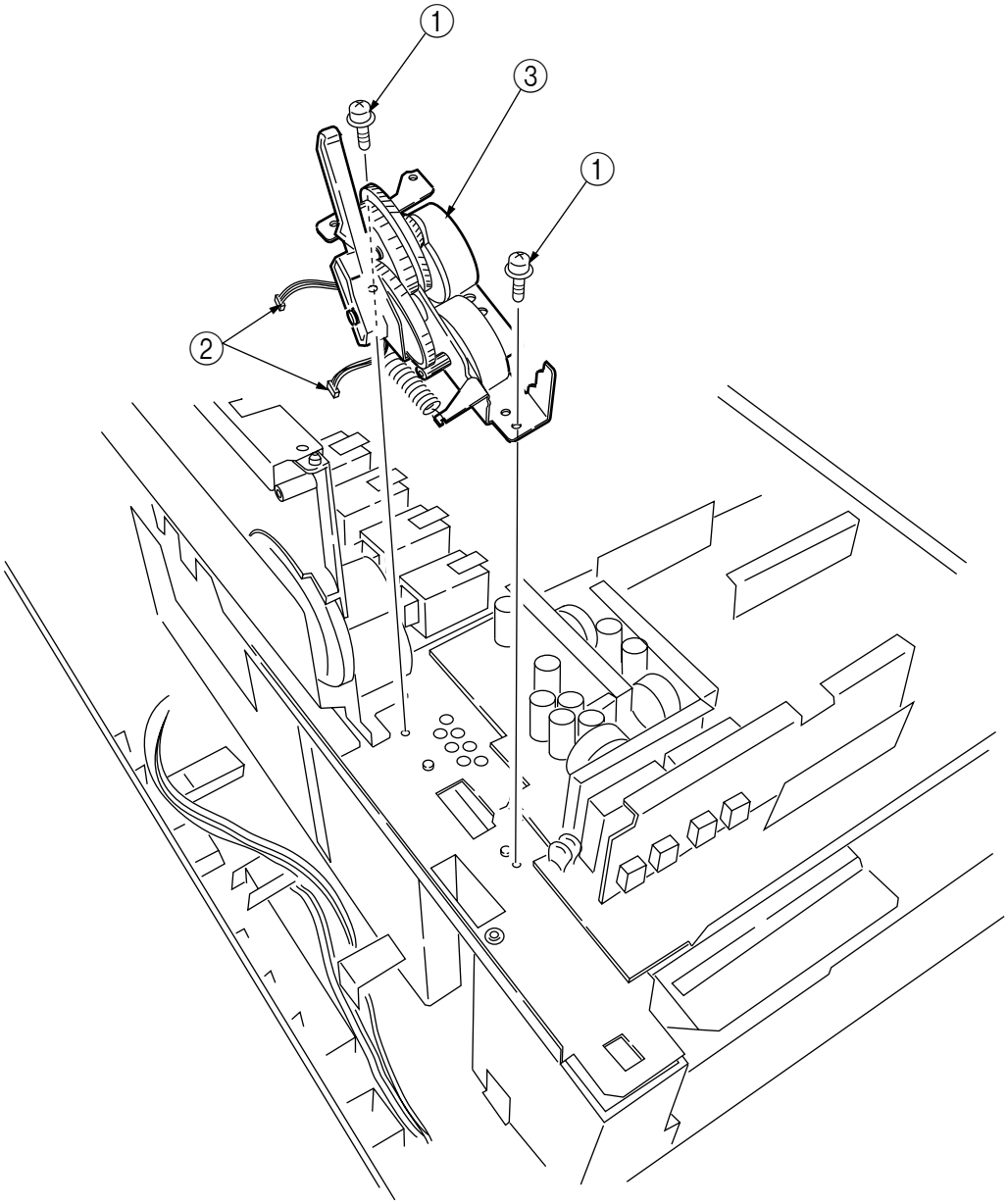


Figure 2-3-31 Belt Motor Assy

2.3.32 Fuser Latching Handle (R)

(1) Remove the printer unit chassis (see section 2.3.24).
(2) Remove the E ring ①.
(3) Remove the fuser latching handle spring ② to detach the fuser latching handle (R) ③.

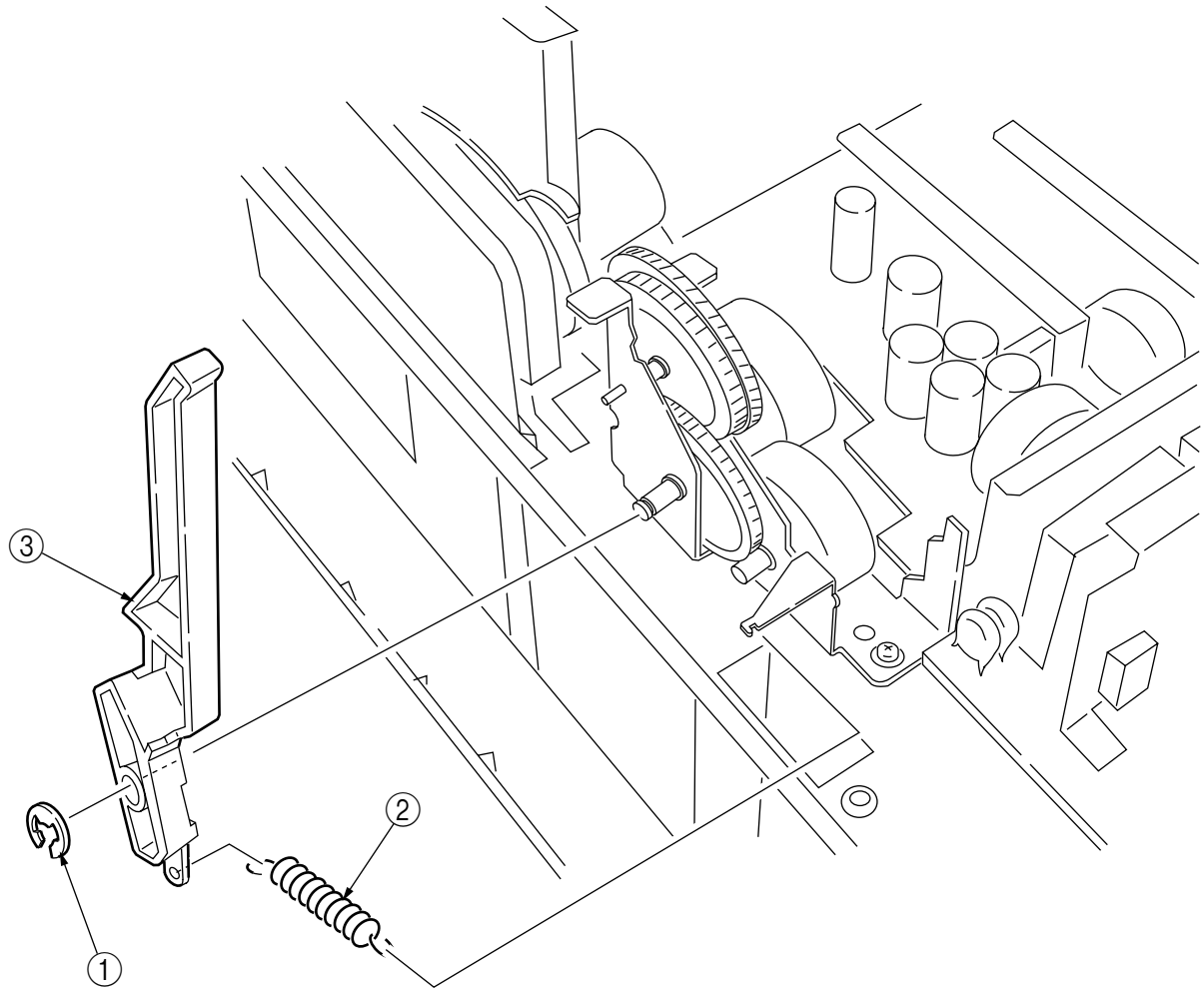


Figure 2-3-32 Fuser Latching Handle (R)

2.3.33 Main Motor Assy

(1) Remove the belt motor Assy (see section 2.3.31).
(2) Remove all the connectors.
(3) Remove the four screws ① to demount the main motor Assy ②.

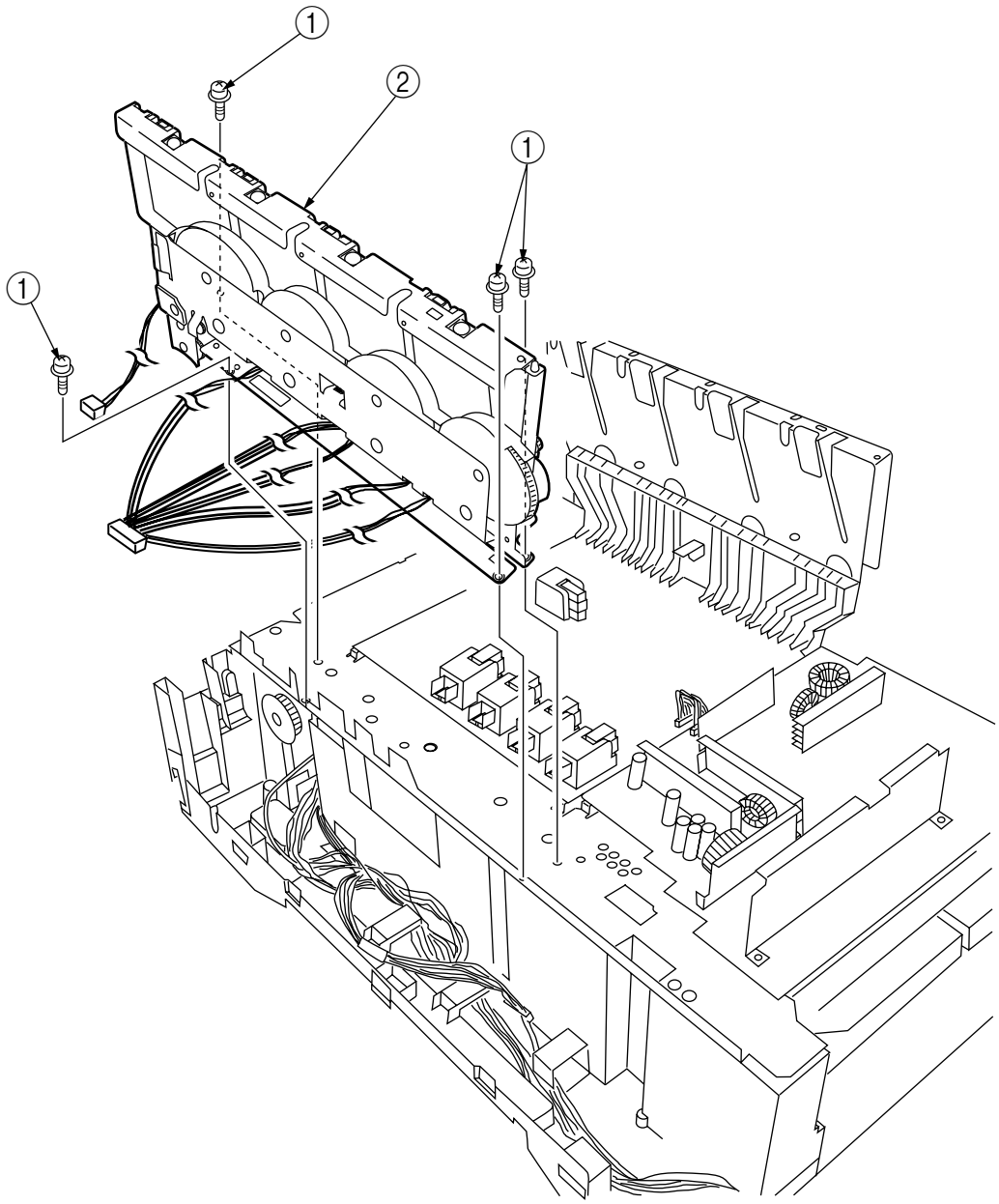


Figure 2-3-33 Main Motor Assy

2.3.34 Main Feeder Drive Motor

(1) Remove the two screws ① to detach the main feeder drive motor ②.
(2) Unscrew the screw ③ to remove the main feeder drive motor bracket ④.
(3) Remove the main feeder drive motor gears A ⑤ and B ⑥.

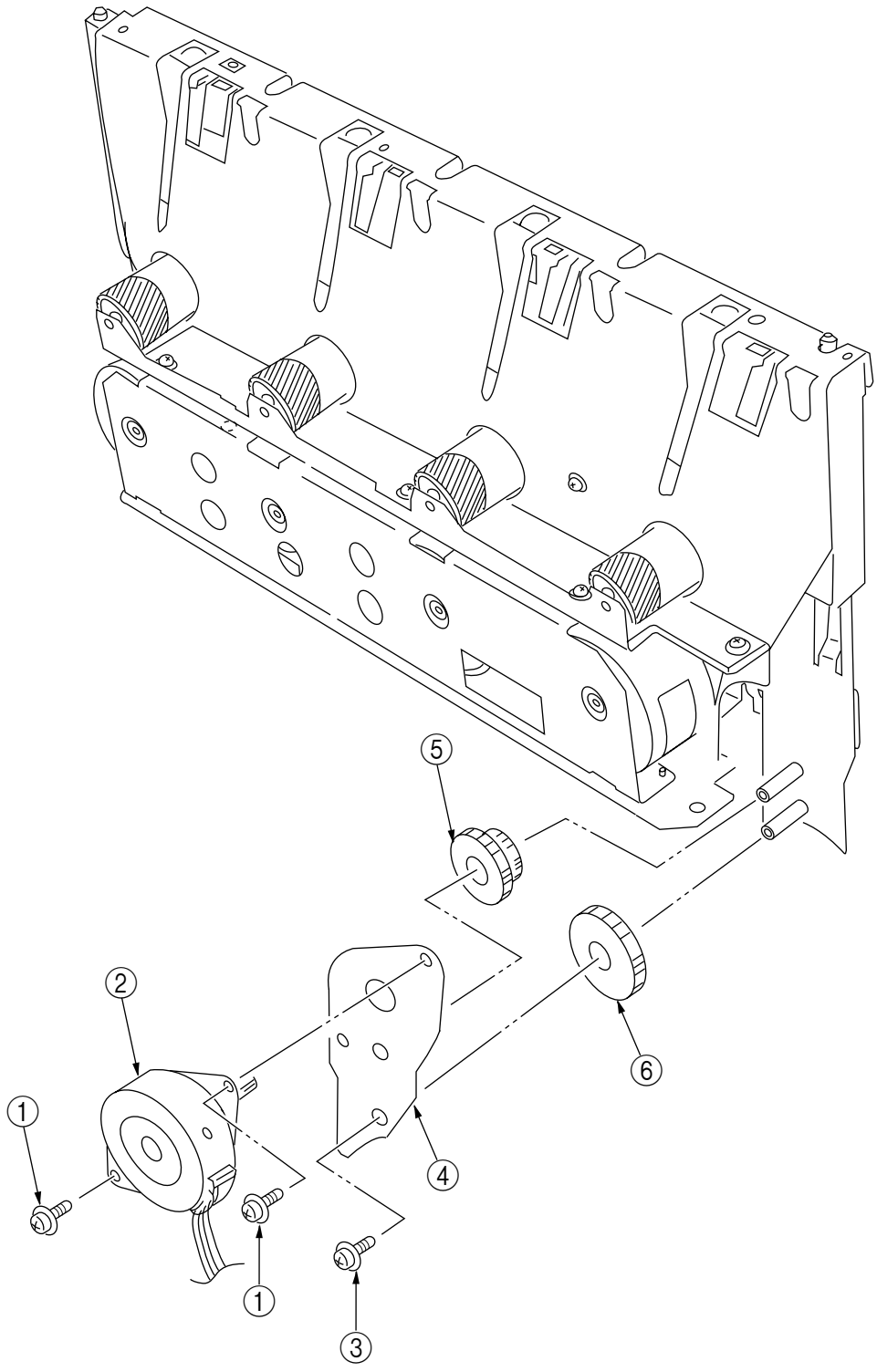


Figure 2-3-34 Main Feeder Drive Motor

2.3.35 Contact Assy/ Left Plate Assy

(1) Remove the printer unit chassis (see section 2.3.24).
(2) Remove the four screws ① to detach the left plate Assy ②.
(3) Remove the screw ③ to detach the contact Assy ④.

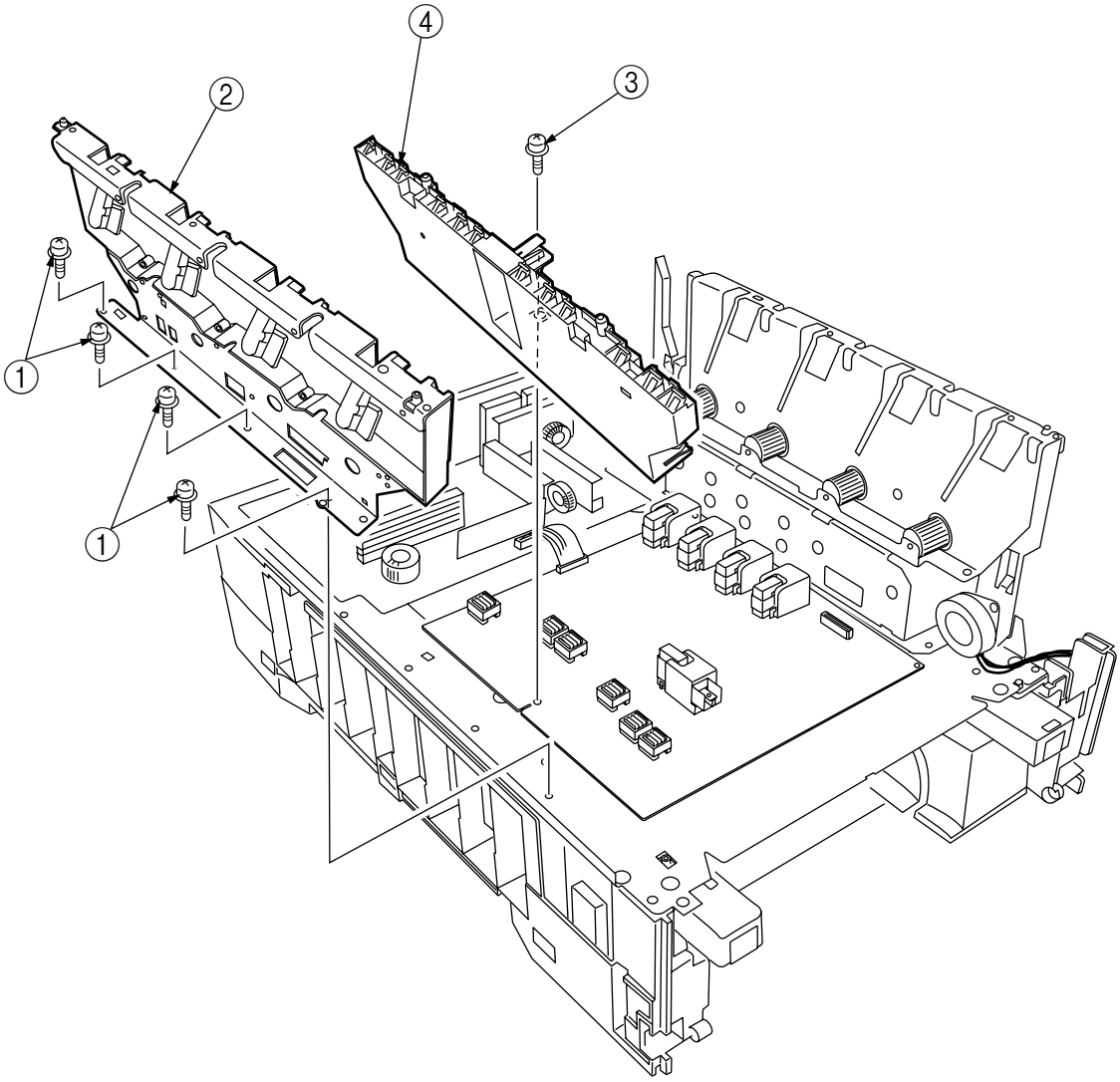


Figure 2-3-35 Contact Assy/ Left Plate Assy

2.3.36 Low Voltage Power Supply

(1) Remove the printer unit chassis (see section 2.3.24).
(2) Unhook the connector ①.
(3) Unscrew the screw ② to remove the earth cable ③.
(4) Unscrew the six screws ④ to demount the low voltage power supply ⑤.

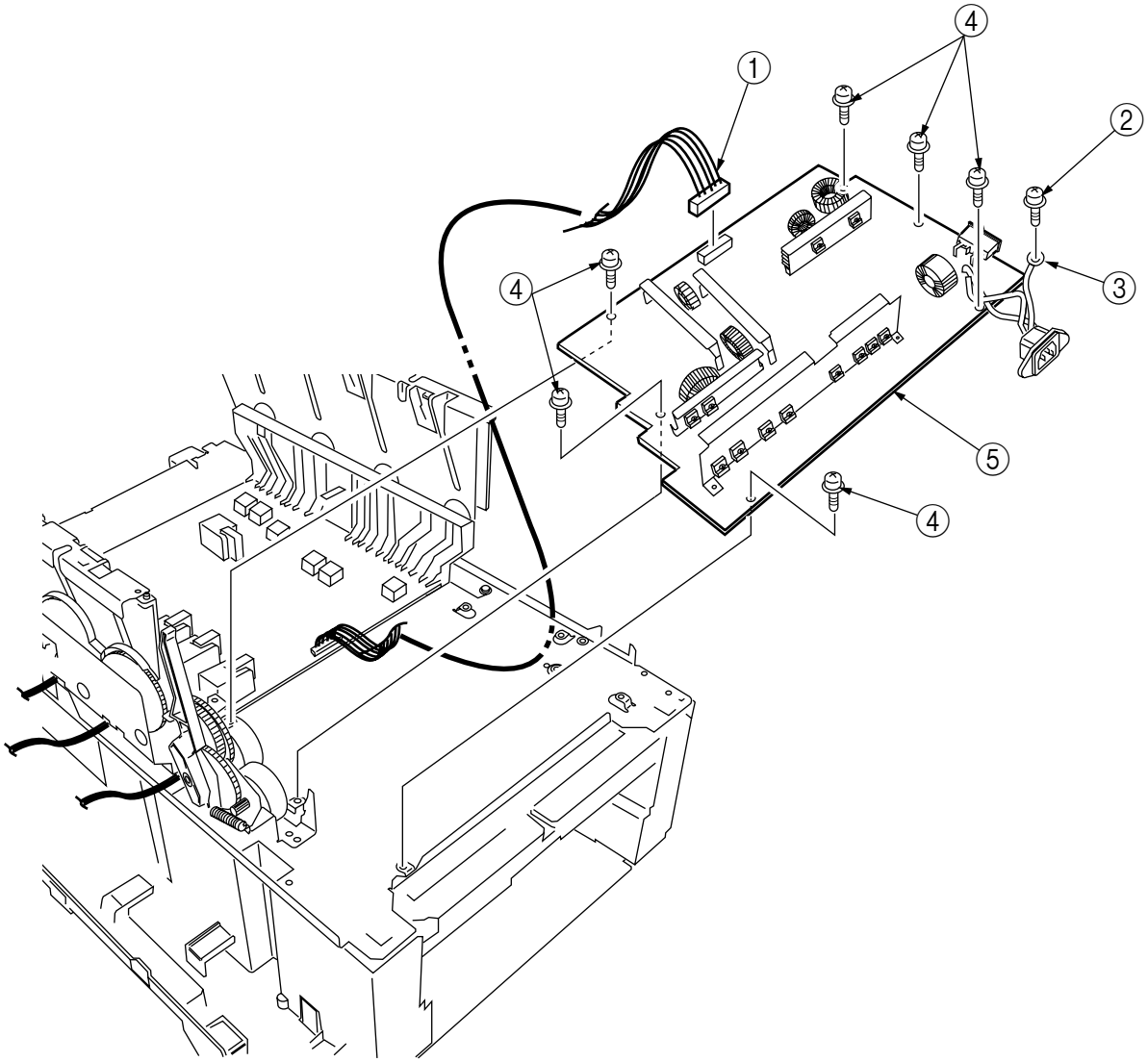


Figure 2-3-36 Low Voltage Power Supply

2.3.37 High voltage power supply

(1) Remove the contact Assy (see section 2.3.35).
(2) Unhook the connector of the high voltage power supply ②.
(3) Remove the two screws ① to detach the high voltage power supply (2) and the tape harness ③.

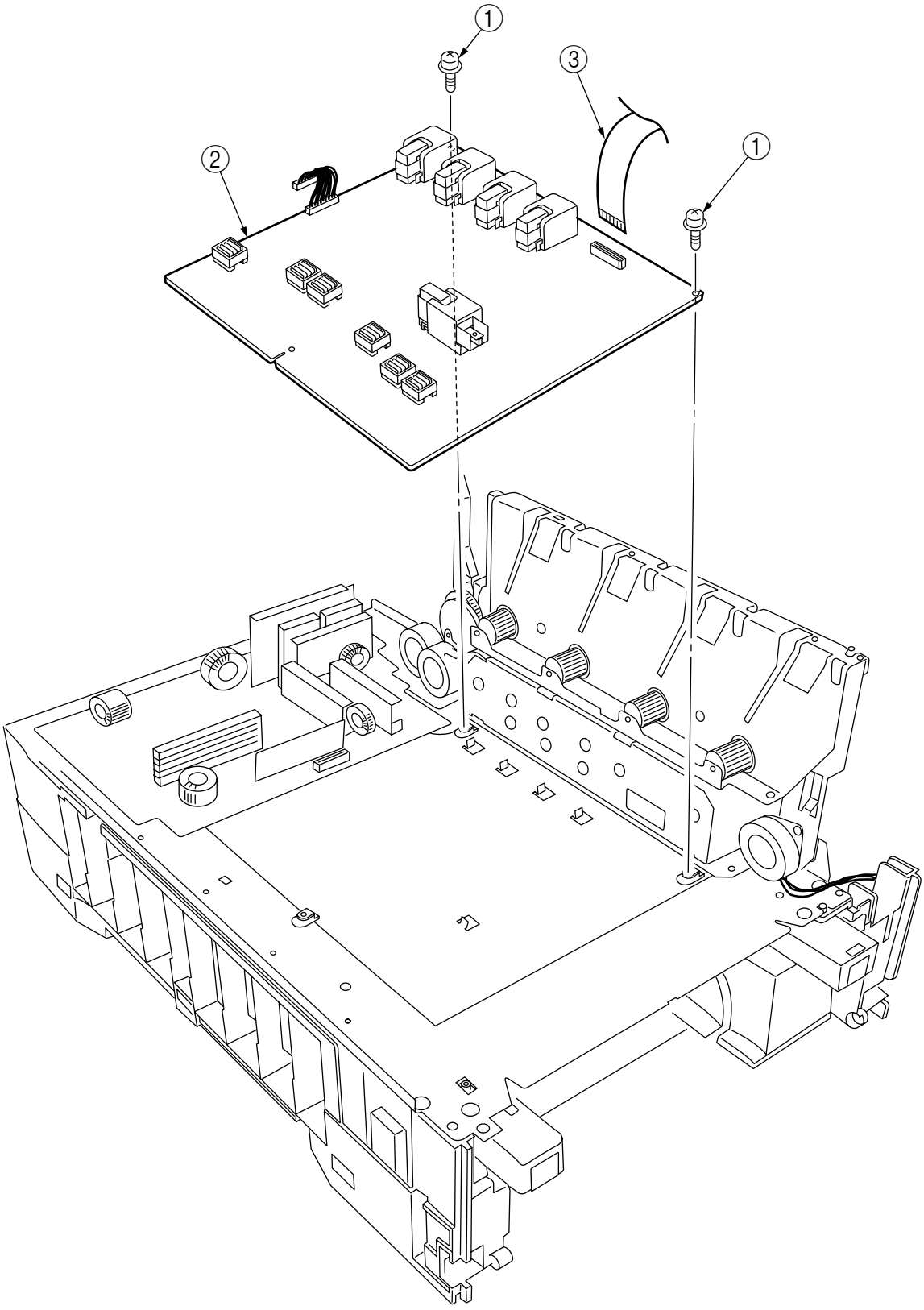


Figure 2-3-37 High Voltage Power Supply

2.3.38 Main Feed Assy

(1) Remove the printer unit chassis (see section 2.3.24).
(2) Remove the low voltage power supply and high voltage power supply (see sections 2.3.36 and 2.3.37).
(3) Unscrew the five screws ① to remove the lower plate ②.
(4) Unscrew the four screws ③ to demount the main feed Assy ④.
(5) Unhook and remove the main feed drive gear ⑤.

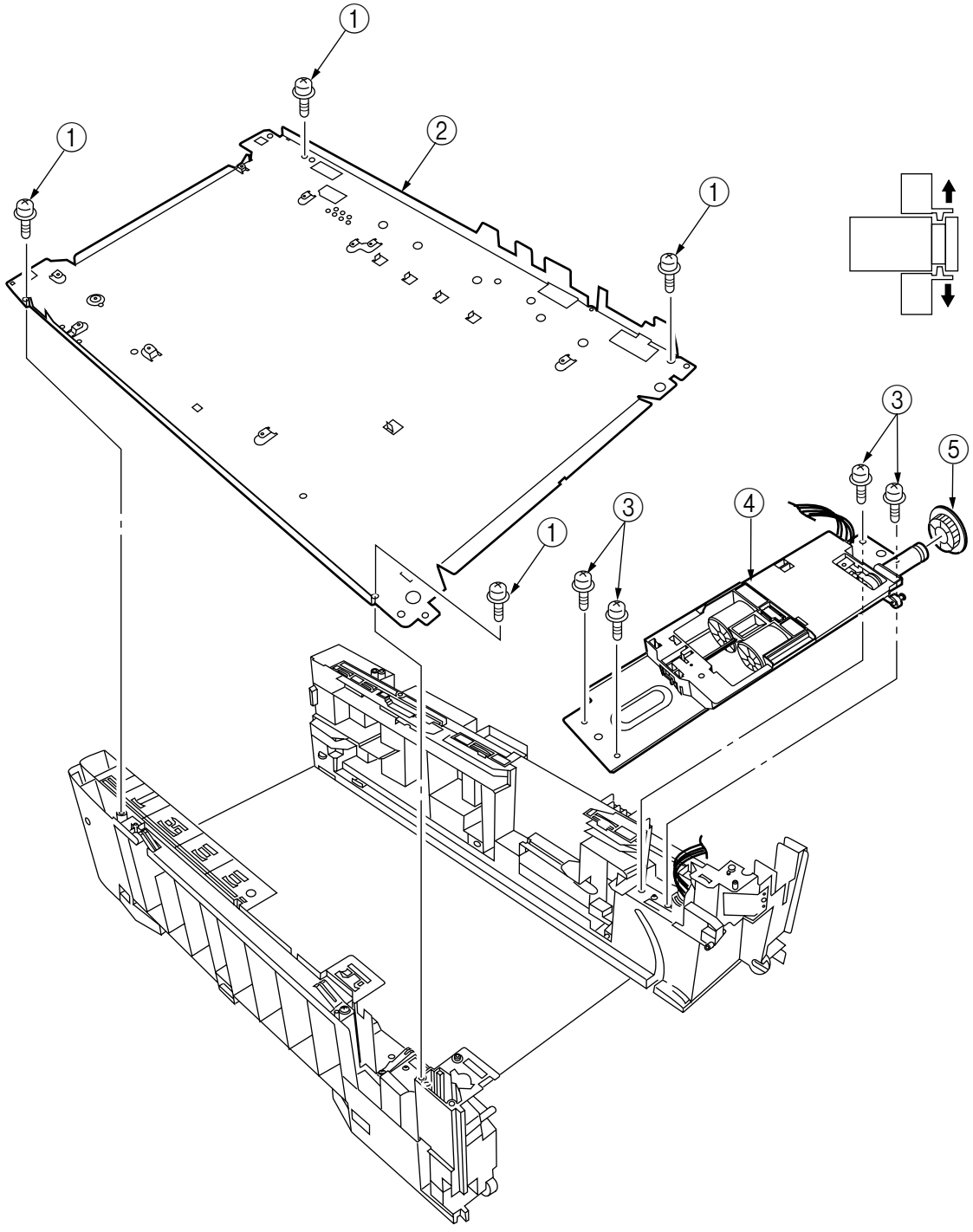


Figure 2-3-38 Main Feed Assy

2.3.39 Cassette/ Left Guide Assy

(1) Remove the printer unit chassis (see section 2.3.24).
(2) Remove the main feed Assy (see section 2.3.38).
(3) Remove the three screws ① to detach the left cassette guide Assy ②. At the same time, the earth plate ③ becomes detached.
(4) Remove the cassette lift spring ④, then remove the plastic slide ⑤, the cassette lift arm (L) ⑥ and the plastic roller ⑦.
(5) Remove the two feet ⑧.
(6) Remove the cassette lock spring ⑨, then remove the cassette lock ⑩.

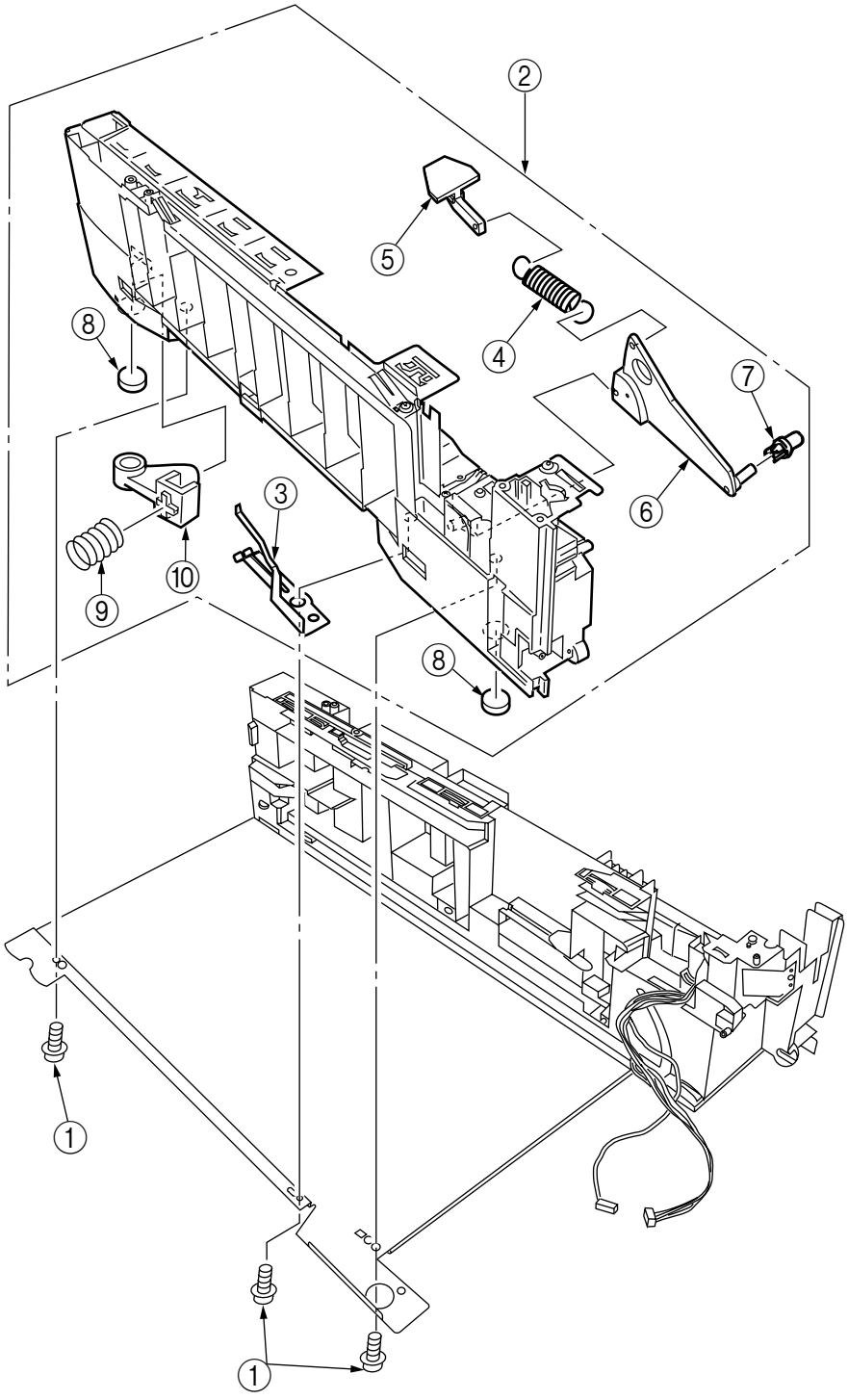


Figure 2-3-39 Cassette/ Left Guide Assy

2.3.40 Cassette/ Right Guide Assy

(1) Remove the printer unit chassis (see section 2.3.24).
(2) Remove the main feed Assy (see section 2.3.38).
(3) Remove the five screws ① to detach the right cassette guide Assy ②. At the same time, the earth plate ③ becomes detached.
(4) Remove the cassette lift spring ④, then detach the plastic slide ⑤, the cassette lift arm (L) ⑥ and the plastic roller ⑦.
(5) Unscrew the screw ⑧ to remove the paper size actuator ⑨.
(6) Unscrew the screw ⑩ to remove the paper size sensing PWB ⑪ in the downward direction.
(7) Remove the two feet ⑫.
(8) Remove the cassette lock spring ⑬, then remove the cassette lock ⑭.
(9) Unscrew the two screws ⑮ to remove the 2nd tray connector ⑯.
(10) Unscrew the screw ⑰, then remove the duplex Assy ground contact ⑱.

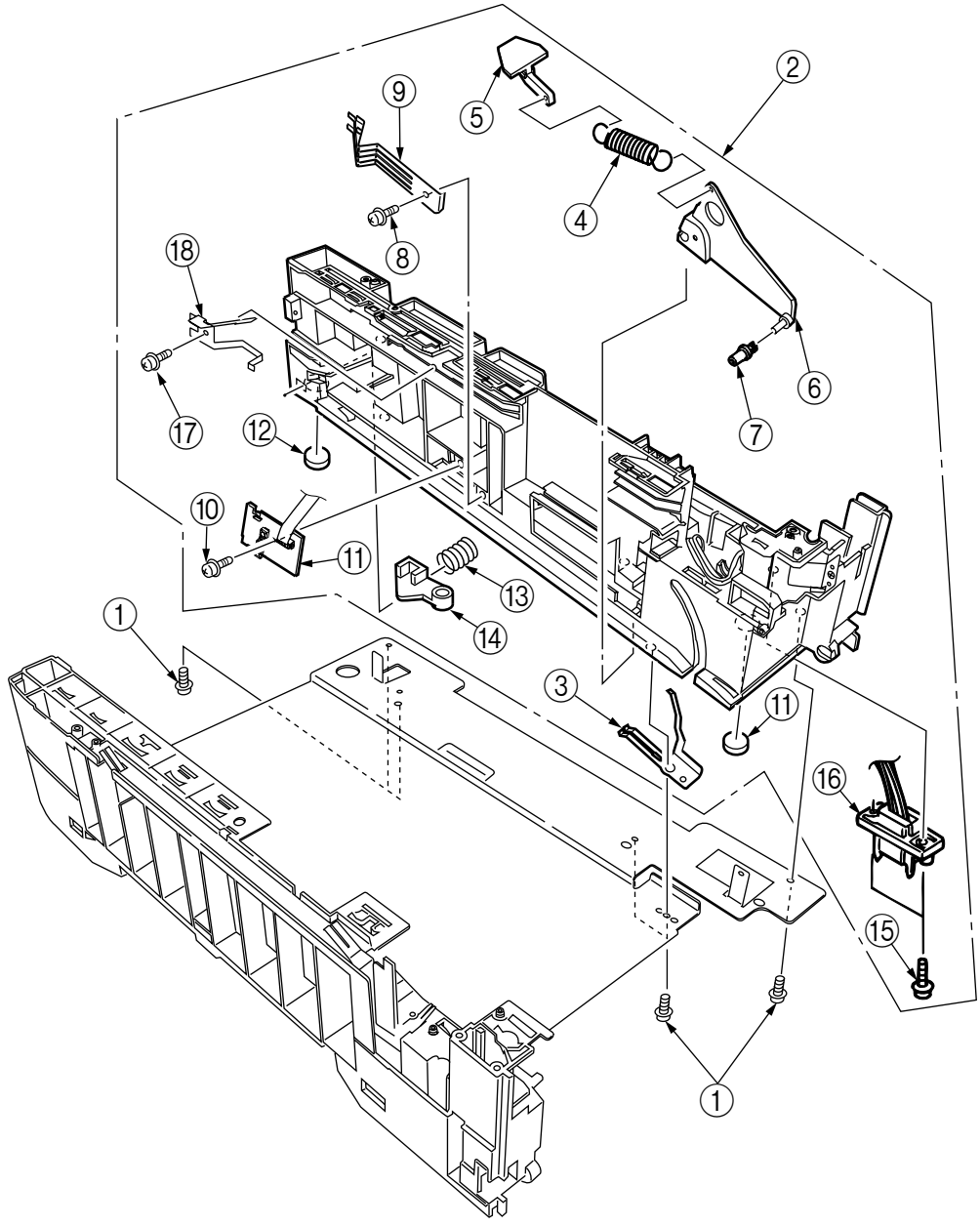


Figure 2-3-40 Printer Tray/ Right Guide Assy

2.3.41 Fuser Unit

(1) Open the top cover ①.

(2) Push the right and left fuser levers (blue) ② in the arrow direction to detach the fuser unit ③.

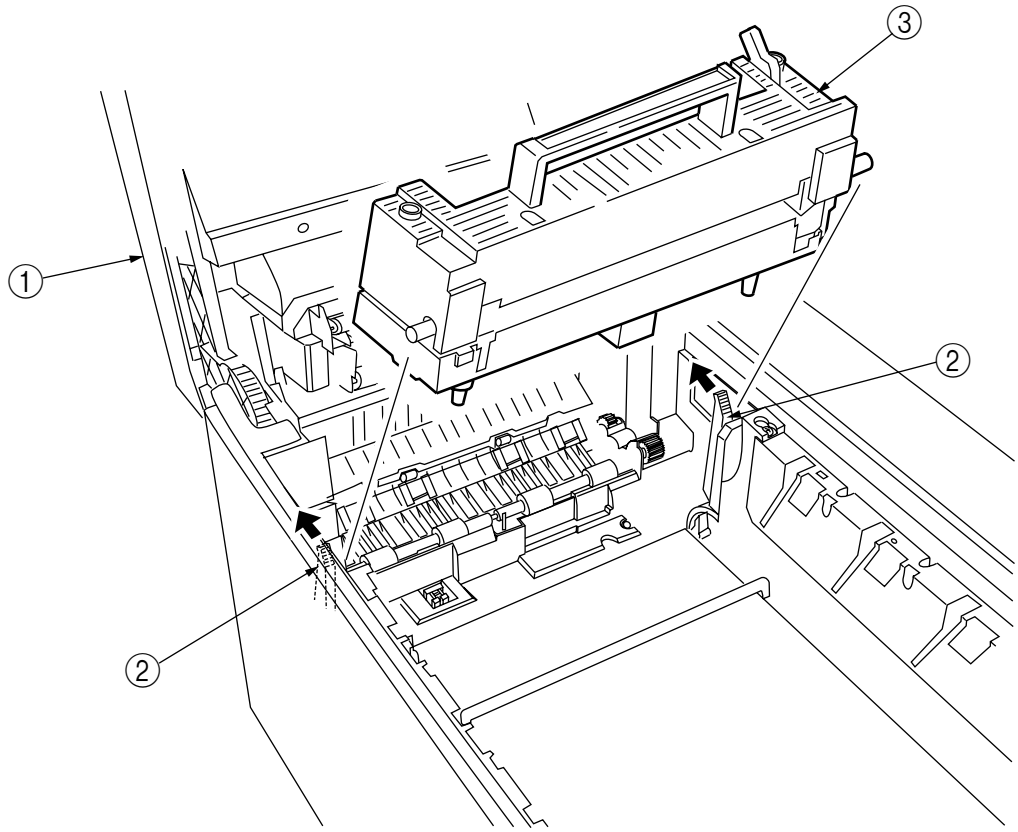


Figure 2-3-41 Fuser Unit

2.3.42 Belt Unit

(1) Open the top cover ①.
(2) Remove the I/D unit.
(3) Push the lever (blue) ② in the arrow direction, raise the handle (blue) and detach the belt unit ③.

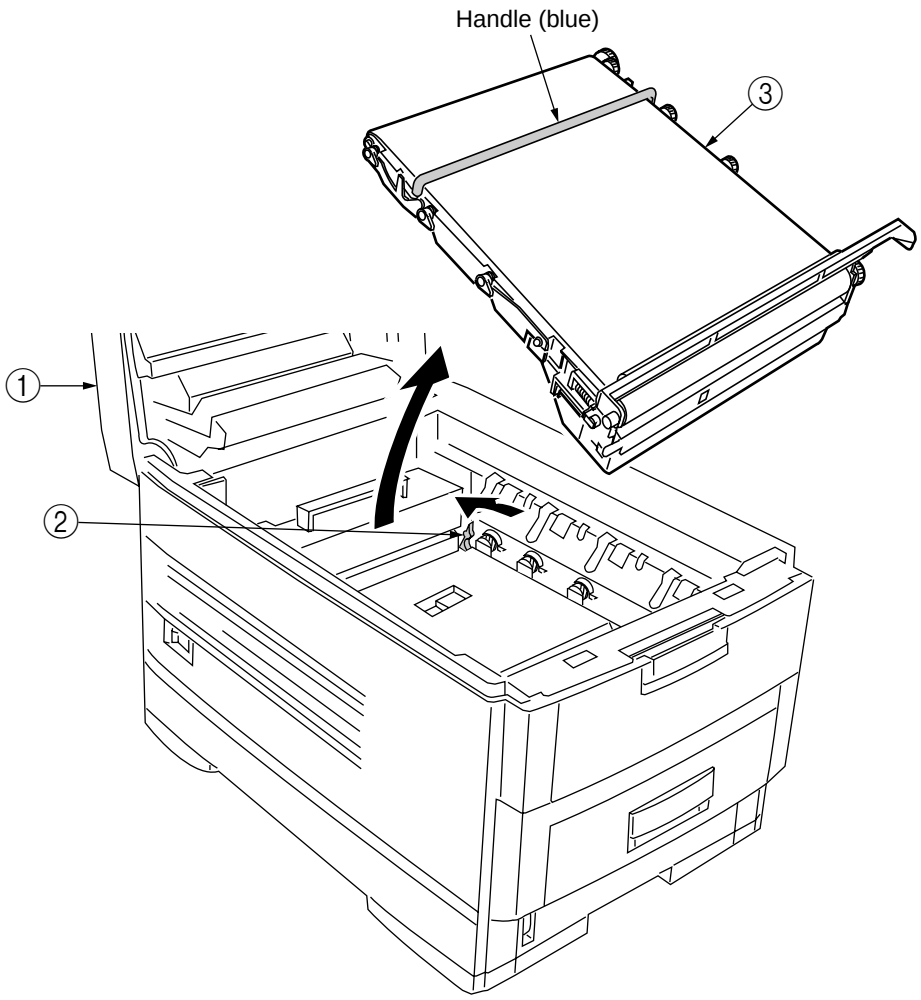


Figure 2-3-42 Belt Unit

2.3.43 Duplex Unit

(1) Remove the cassette Assy, the front cover Assy and the front cover inner baffle.
(2) Unlatch the rear at the right and left, and pull the duplex unit ① toward the front.

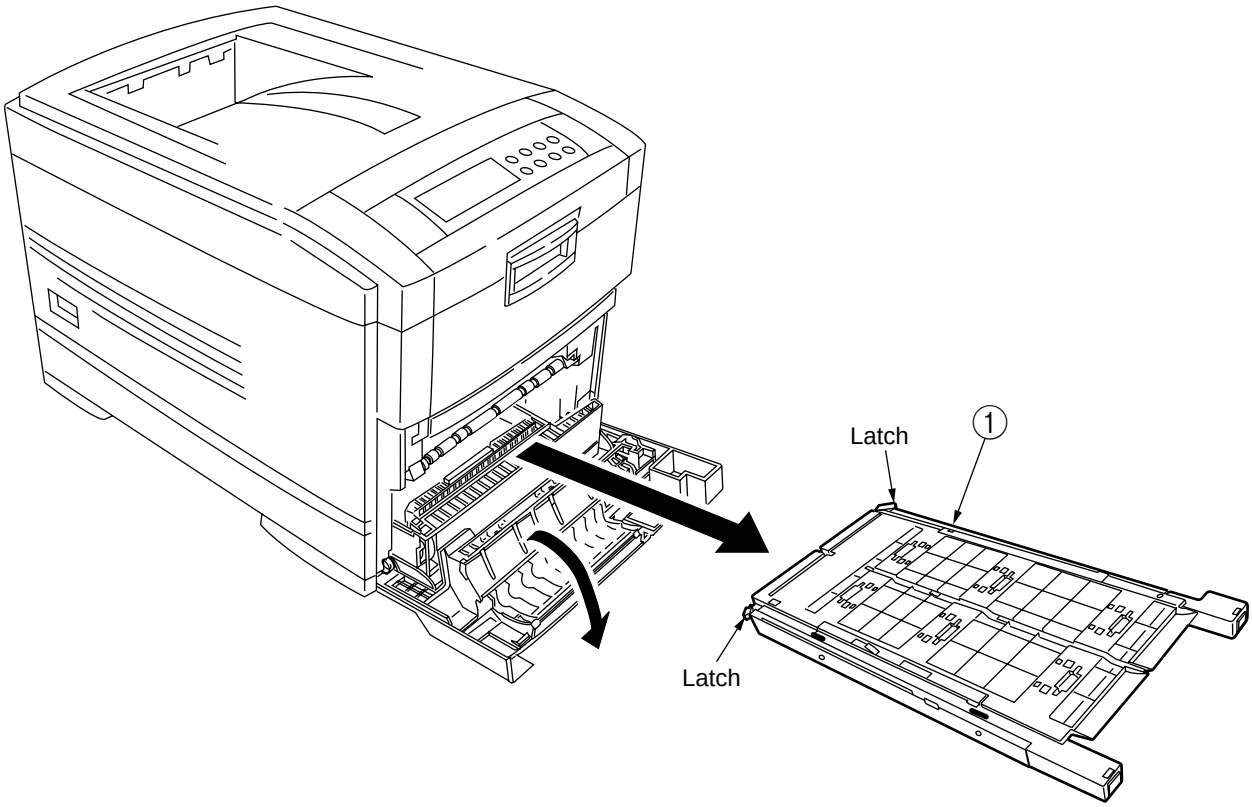


Figure 2-3-43 Duplex Unit

2.3.44 Guide Rails (L) and (R)

(1) Remove the duplex unit (see section 2.3.43).
(2) Remove the six screws ① to detach the guide rails (L) ② and (R) ③.

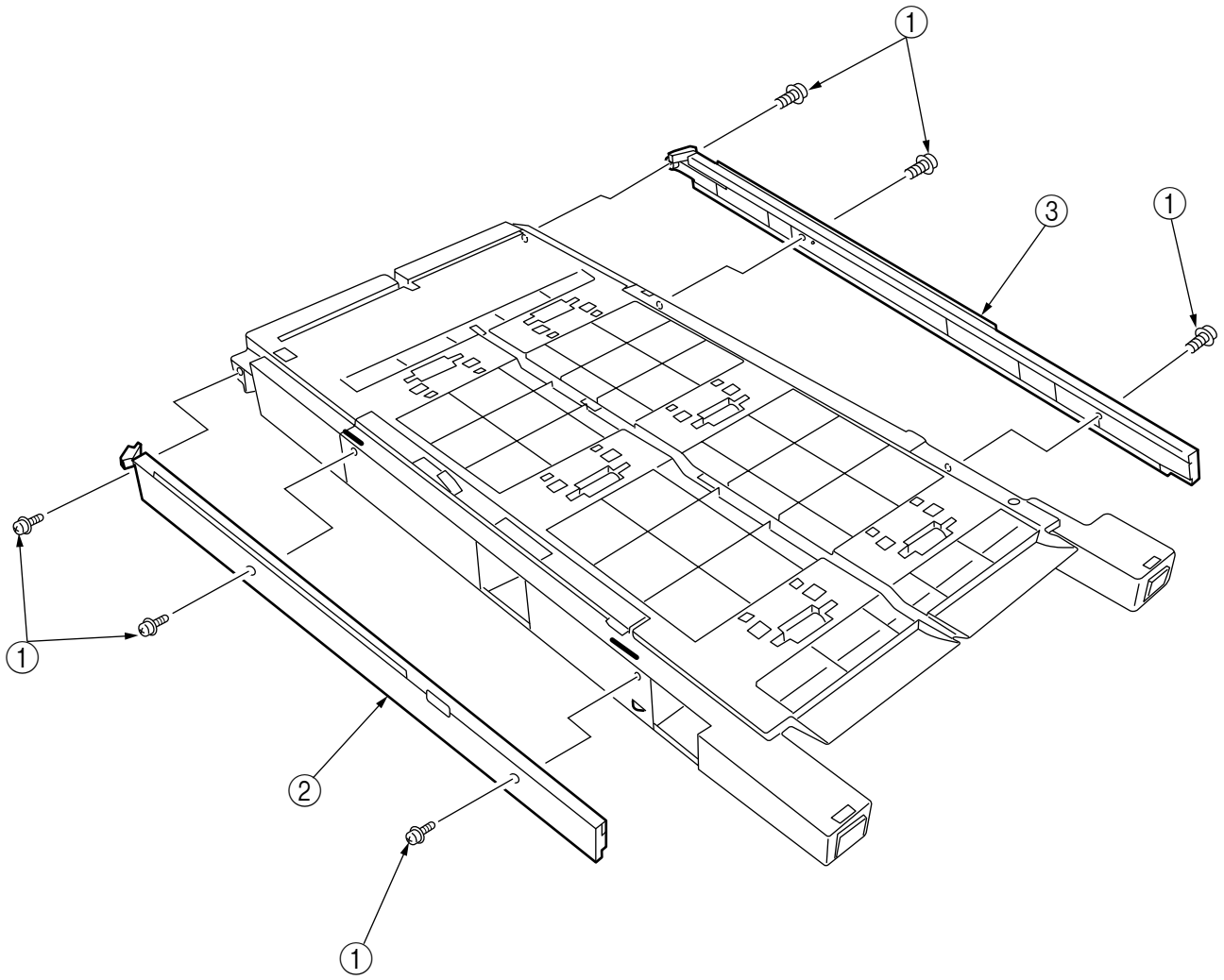


Figure 2-3-44 Guide Rail (L), (R)

### 2.3.45 Duplex Transport Assembly

(1) Turn over the duplex transport Assy.
(2) Unscrew the three screws ① and five screws ② to detach the plate ③.
(3) Unplug the connector and detach the mold Assy ④.
(4) Detach the two actuators ⑤.
(5) Unscrew the screws ⑥ and ⑦ to remove the earth ⑧.
(6) Unhook the connector and disengage the two claws to detach PCB-MOP ⑨.
(7) Unplug the cable and, warping the claw, detach the transport sensor.
(8) Unscrew the two screws to detach the cord duplex connector Assy.
(9) Unscrew the screw ⑩ to remove the earth ⑪.
(10) Unscrew the screw ⑫ to remove the earth ⑬.
(11) Unscrew the screw ⑭ to remove the earth ⑮.
(12) Detach the bush ⑯, gear ⑰ and bush ⑱, then detach the roller ⑲.
(13) Unscrew the screw ⑳ to remove the earth ㉑.
(14) Detach the gear ㉒ and bush ㉓. At the same time, the mini pitch belt ㉔ becomes detached.
(15) Detach the gear ㉕ and bush ㉖, then detach the roller ㉗. At the same time, the mini pitch belt ㉘ becomes detached.
(16) Unscrew the screw ㉙ to remove the earth ㉚.
(17) Remove the E ring ㉛ and three screws ㉜ to detach the motor Assy ㉝. At the same time, the earth ㉞ becomes detached.
(18) Detach the gear ㉟ and bush ㊱.
(19) Detach the gear ㊲, knock-pin ㊳ and bush ㊴, then detach the roller ㊵.
(20) Detach the bush ㊶, gear ㊷, knock-pin ㊸ and bush ㊹, then detach the roller ㊺. At the same time, the earths ㊻ and ㊼ become detached.
(21) Detach the idle roller shaft and the idle roller, then detach the idle roller springs (eight springs).
(22) Remove the cable of the duplex transport sensor Assy from the claw of the cover-upper. Disengage the claw, then detach the sensor.

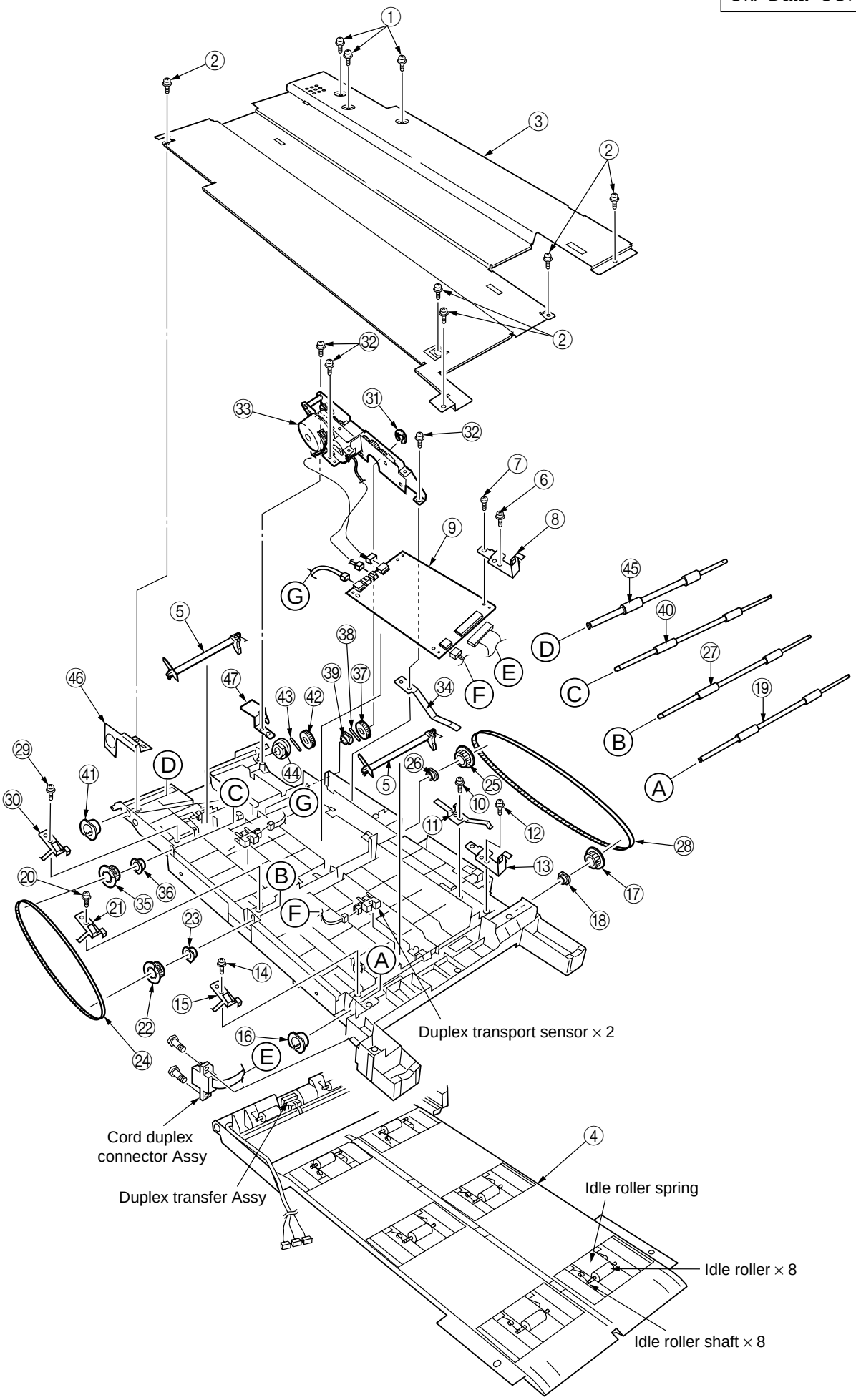


Figure 2-3-45 Duplex Transport Assembly

2.3.46 CU Assy

(1) Pulling out Controller Board

1. Undo the two screws ①.
2. Pull the controller board ② out.
3. Place the controller board ② on a flat table.

(2) Detaching Fan

1. Remove the connector ③.
2. Remove the two screws ④.
3. Detach the fan ⑤.

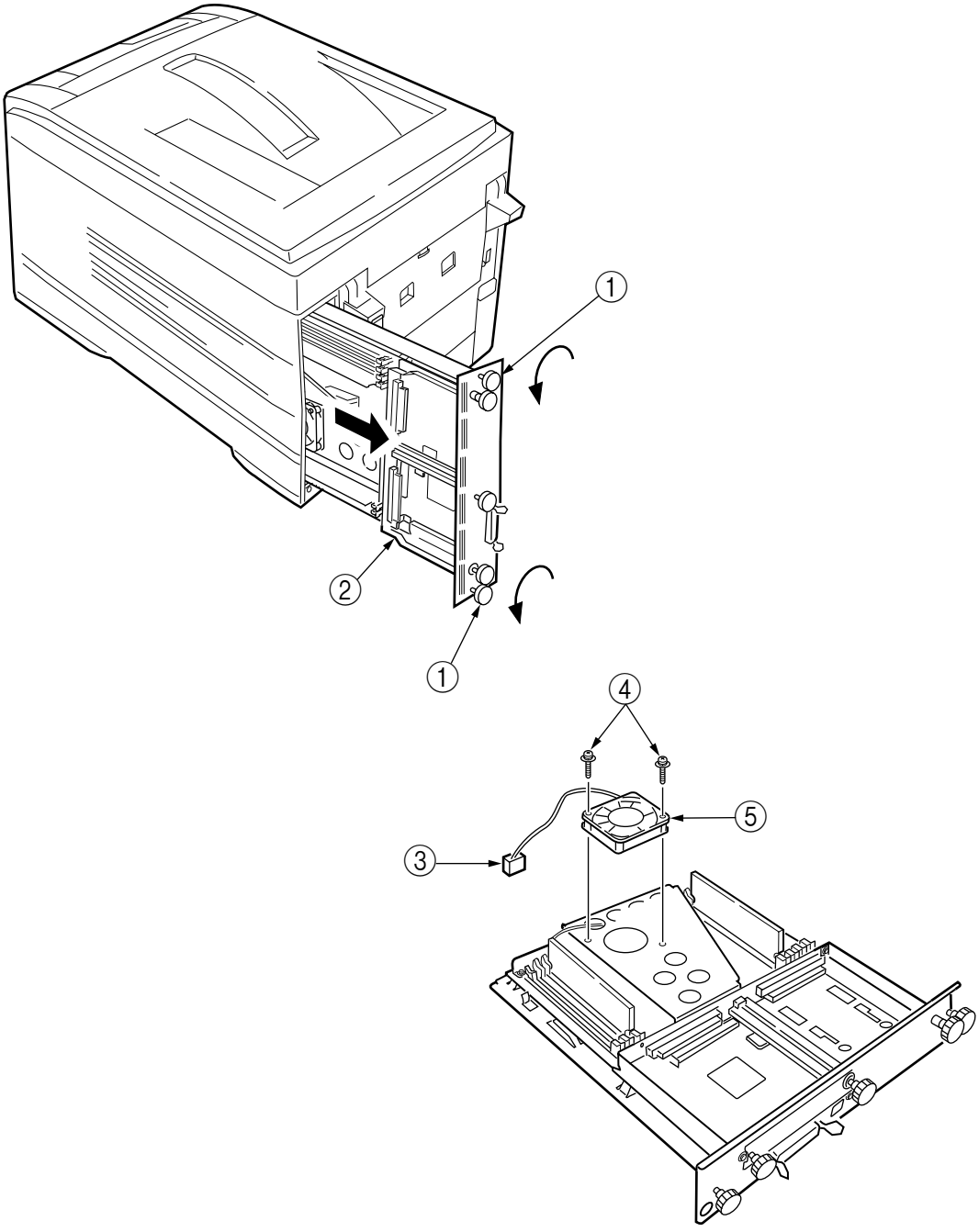


Figure 2-3-46 CU Assy (1/2)

(3) Demounting SWA Board

1. Remove the three screws ⑥ and screw ⑦ to detach the fan bracket ⑧.
2. Remove the screw ⑨ and four screws ⑩ to detach the plate support ⑪ and the guide rail A⑫.
3. Remove the two screws ⑬ to detach the guide rail B⑭.
4. Remove the two screws ⑮ and two screws ⑯ and the plate-FG(Centro)⑰, then demount the SWA board ⑱.

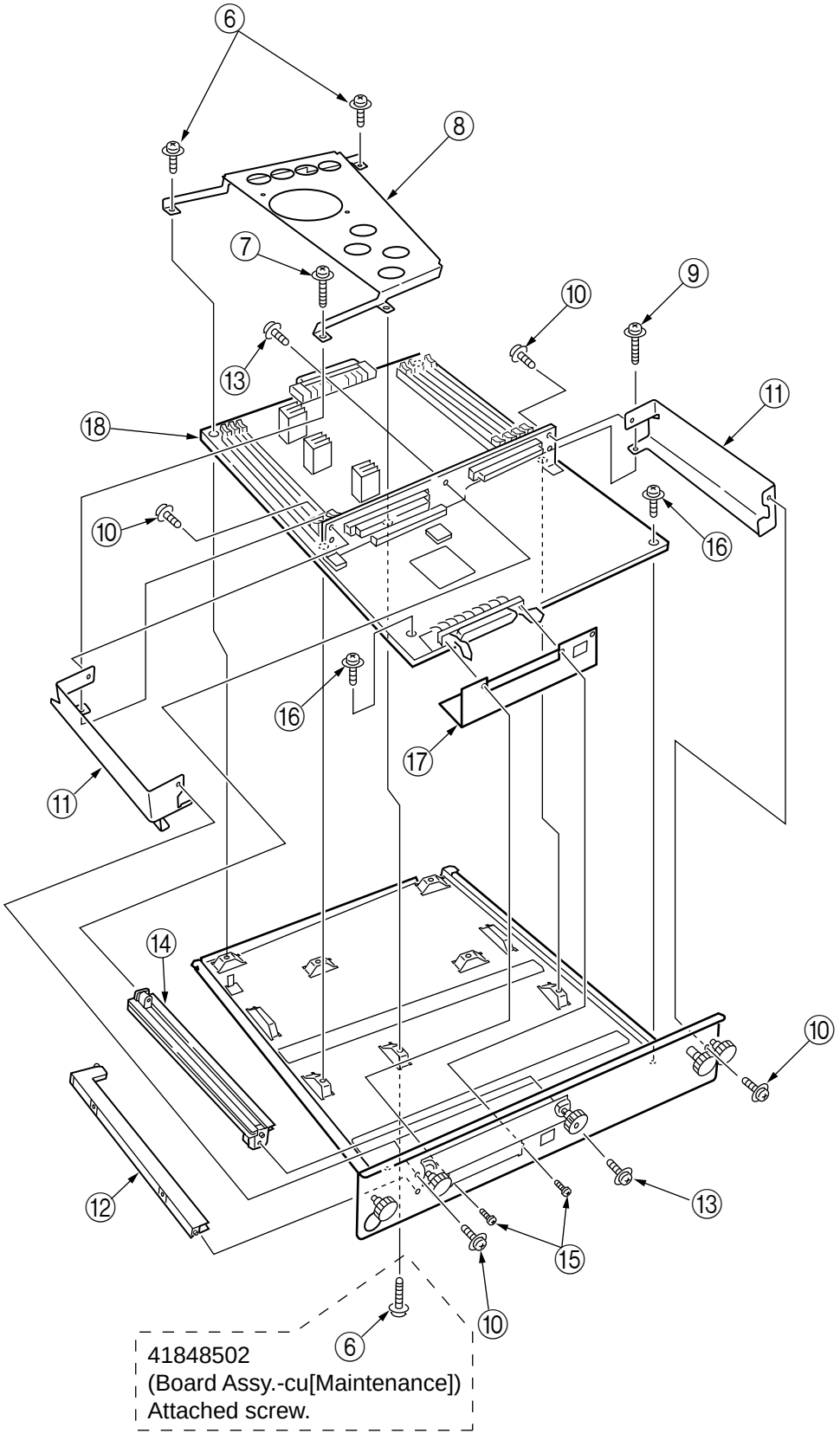


Figure 2-3-46 CU Assy (2/2)

# 3. ADJUSTMENTS

Adjustments on the C7400/C7200 of printers are made by key entry on the operator panel. In addition to a standard menu, there is a maintenance menu in each printer. Select the one that serves the purpose of intended adjustment.

## 3.1 Maintenance Modes and Their Functions

### 3.1.1 Maintenance menu

The standard menu category includes the maintenance menu category. The followings can be set from this menu.

Maintenance Menu

| Category | Item(1st Line) | Value(2nd Line) | DF | Functions |
|---|---|---|---|---|
| MAINTENANCE MENU | Power Save Mode | Enabled<br>Disabled | * | Sets the Power Save Mode enabled/disabled. The shift time to enable the Power Save mode can be changed according to the POWER SAVE SHIFT TIME item of SYSTEM CONFIG MENU. |
| | Normal Paper Black Setting | 0<br>+1<br>+2<br>-2<br>-1 | * | Implements fine adjustment of BLACK printing on normal paper when unclear characters or spots are often found on print results. With dispersed or snowed printing in the part at high-density, decrease the value. With unclear printing, increase the value. |
| | Normal Paper Color Setting | 0<br>+1<br>+2<br>-2<br>-1 | * | Implements fine adjustment of COLOR printing on normal paper when unclear characters or spots are often found on the print result. With dispersed or snowed printing in the part at high-density, decrease the value. With unclear printing, increase the value. |
| | Transparency Black Setting | 0<br>+1<br>+2<br>-2<br>-1 | * | Implements fine adjustment of BLACK printing on Transparency when unclear characters or spots are often found on the print result. With dispersed or snowed printing in the part at high-density, decrease the value. With unclear printing, increase the value. |
| | Transparency Color Setting | 0<br>+1<br>+2<br>-2<br>-1 | * | Implements fine adjustment of COLOR printing on Transparency when unclear characters or spots are often found on the print result. With dispersed or snowed printing in the part at high-density, decrease the value. With unclear printing, increase the value. |

### 3.1.2 Engine maintenance mode

The engine maintenance mode includes three modes, levels 1 to 3. The level 1 aims to assist in checking the media transport systems and the basic operations of printing systems etc. The level 2, which sets the consumable counter and tests the color registration adjustment function, does not require relatively special knowledge. Working with the level 3, including process parameter setting, takes expertise and the level contains PU individual experimental elements. Basically do not use items other than those in the level 1.

#### 3.1.2.1 Operator panel

Operational descriptions about the self-diagnosis are premised on the following operator panel layout.

#### 3.1.2.2 General self-diagnosis mode (level 1)

Following is the menu of the general self-diagnosis mode.

- Switch Scan Test
- LED Head Test
- Motor and Clutch Tests
- Test Pattern Execution
- NVM Initialization
- Consumable Counter Display
- Consumable Counter Display - Continuous

##### 3.1.2.2.1 Entering self-diagnosis mode (level 1)

1. Detach the main controller board.
2. While holding the ① and ④ keys down at the same time, turn the power on to enter this mode.

| ENGINE DIAG MODE XX.XX |
|---|
| |

3. “ENGINE DIAG MODE XX.XX” appears in the upper display. XX.XX shows the version of ROM.
4. Go to each self-diagnosis step by using the ① and ⑤ keys (pressing ① and ⑤ keys rotates the menu items).

##### 3.1.2.2.2 Exiting self-diagnosis mode

1. While “ENGINE DIAG MODE XX.XX” is displayed, press the (0) key, or turn the power off and, after ten seconds, on again.

3.1.2.3 Switch scan test

This self-diagnosis is used when the input sensor and the switch are checked.

1. Enter the general diagnosis mode, and press and hold the ① and ⑤ keys down until “SWITCH SCAN” appears on the upper display (the ① key increments a test item and the ⑤ key decrements a test item).

| SWITCH SCAN |
| --- |
| |

2. Table 3-1 lists SCAN numbers. Hold the ② and ⑥ keys down until the SCAN number for a unit to be tested shows up on the upper display (the ② key increments a test item and the ⑥ key decrements a test item).
3. In response to the press of the ③ key, the test starts, the SWITCH SCAN number begins blinking, then the corresponding unit number (any of 1 to 4) and the current status are displayed.

| SWITCH SCAN 00 |
| --- |
| 1=H 2=L 3=H 4=L |

   Operate the units (Figure 3-1). Their respective liquid crystal displays are provided (Displays vary by sensor. See Table 3-1 for details).
4. When the ⑦ key is touched, the SWITCH SCAN number goes back to an indication view (stops blinking).
5. Repeat steps 2 through 4 as required.
6. To end the test, press the ④ key (the display is restored to the view of step 1).

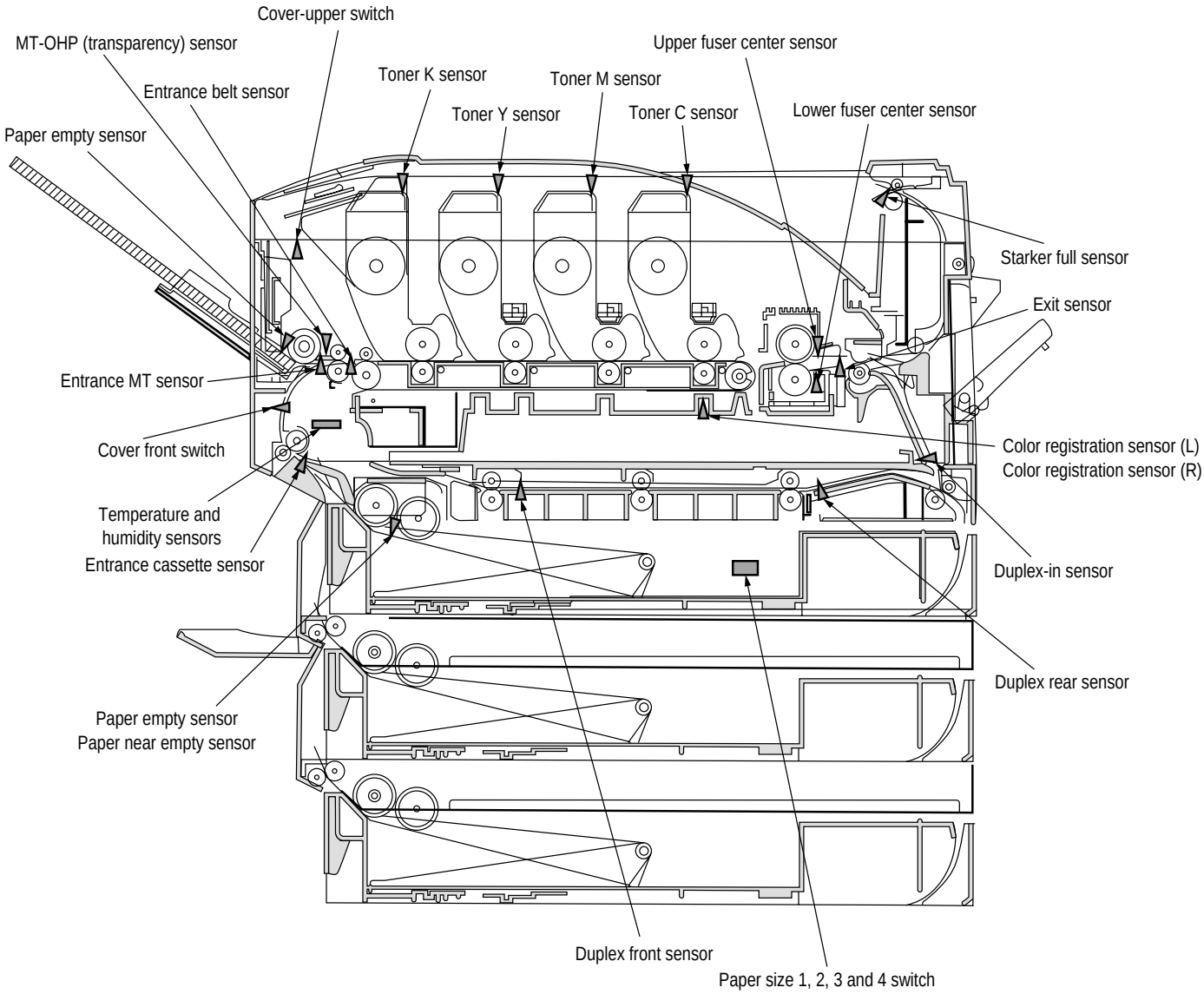


Figure 3-1 Switch Sensor Positions

Table 3-1 Detailed SWITCH SCAN

| SCAN | No. | | | | | | | |
|---|---|---|---|---|---|---|---|---|
| ROW | 1 | Display | 2 | Display | 3 | Display | 4 | Display |
| SWITCH SCAN 00 | Cassette 1 Paper Empty Sensor | Port level H, L | Cassette 1 Paper Near Empty Sensor | Port level H, L | Entrance Cassette Sensor | Port level H, L | Entrance MT Sensor | Port level H, L |
| SWITCH SCAN 01 | Entrance Belt Sensor | Port level H, L | Exit Sensor | Port level H, L | Stacker Full Sensor | Port level H, L | - | – |
| SWITCH SCAN 02 | Toner-K Sensor | Port level H, L | Toner-C Sensor | Port level H, L | Toner-M Sensor | Port level H, L | Toner-Y Sensor | Port level H, L |
| SWITCH SCAN 03 | Front Cover Switch | Port level H, L | Upper Cover Switch | Port level H, L | - | | - | – |
| SWITCH SCAN 04 | - | – | - | – | - | – | - | – |
| SWITCH SCAN 05 | - | – | - | – | - | – | - | – |
| SWITCH SCAN 06 | MT Hopper Switch | Port level H, L | MT Paper Empty Switch | Port level H, L | - | – | MT Transparency Sensor | Port level H, L |
| SWITCH SCAN 07 | Cassette 1 Paper Size Switch | Port level H, L | Cassette 1 Paper Size 2 Switch | Port level H, L | Cassette 1 Paper Size 3 Switch | Port level H, L | Cassette 1 Paper Size 4 Switch | Port level H, L |
| SWITCH SCAN 08 | Color Registration Sensor | AD value ***H | Color Registration Sensor (R) | AD value ***H | - | – | - | – |
| SWITCH SCAN 09 | Upper Fuser Center Sensor | AD value ***H | - | – | Lower Fuser Center Sensor | AD value ***H | - | – |
| SWITCH SCAN 10 | Humidity Sensor | AD value ***H | Temperature Sensor | AD value ***H | - | – | - | – |
| SWITCH SCAN 11 (Option) | Duplex-In Sensor | Port level H, L | Duplex Rear Sensor | Port level H, L | - | – | Duplex Front Sensor | Port level H, L |
| SWITCH SCAN 12 (Option) | Cassette 2 Paper Size 1 Switch | Port level H, L | Cassette 2 Paper Size 2 Switch | Port level H, L | Cassette 2 Paper Size 3 Switch | Port level H, L | Cassette 2 Paper Size 4 Switch | Port level H, L |
| SWITCH SCAN 13 (Option) | Cassette 2 Paper Empty Sensor | Port level H, L | Second Paper Near Empty Sensor | Port level H, L | - | – | - | – |
| SWITCH SCAN 14 (Option) | - | – | - | – | Cassette 2 Hoping Sensor (Paper feed) | Port level H, L | - | – |
| SWITCH SCAN 15 (Option) | Cassette 3 Paper Size 1 Switch | Port level H, L | Cassette 3 Paper Size 2 Switch | Port level H, L | Cassette 3 Paper Size 3 Switch | Port level H, L | Cassette 3 Paper Size 4 Switch | Port level H, L |
| SWITCH SCAN 16 (Option) | Cassette 3 Paper Empty Sensor | Port level H, L | Cassette 3 Paper Near Empty Sensor | Port level H, L | - | – | - | – |
| SWITCH SCAN 17 (Option) | - | – | - | – | Cassette 3 Hopping Sensor (Paper feed) | Port level H, L | - | – |
| SWITCH SCAN 18 (Option) | - | – | - | – | - | – | - | – |
| SWITCH SCAN 19 (Option) | - | – | - | – | - | – | - | – |
| SWITCH SCAN 20 (Option) | - | – | - | – | - | – | - | – |



Oki Data CONFIDENTIAL

3.1.2.4 Motor and clutch test

This self-check routine is used for testing the motor and clutch.

1. Go to the self-diagnosis (level 1) mode, and hold the ① and ⑤ keys down until the upper display of “MOTOR & CLUTCH TEST” is brought up (the ① key increments a test item and the ⑥ key decrements a test item).
2. Hold the ② and ⑥ keys down and wait for the display for a unit to be tested to appear on the lower line (the ② key increments a test item and the ⑥ key decrements a test item). Corresponding displays are listed in Table 3-2.

| MOTOR & CLUTCH TEST |
|---|
| BLACK - ID MOTOR |

3. Pressing the ③ key starts the test, the unit name blinks, then the corresponding unit is driven for 10 seconds (refer to Figure 3-3).

***Note!*** The view of step 2 is restored after 10-second driving and, with the press of the corresponding switch again, the unit is driven again.

- Driving corresponding units subject to the constraints listed in Table 3-2. The driving and activating out of the constraints are disabled and the constraints appear on the lower display.
- The clutch solenoids must repeat on-off operations in normal printing driving (units that cannot be driven singly from a viewpoint of their mechanical structures must be driven in combination with the motor).

4. Use the ⑦ key to stop the drive of the unit (the corresponding unit display remains the same).
5. Repeat the cycle of steps 2 though 4 as the case may be.
6. Pressing the ④ key ends the tests (the display is restored to step 1).

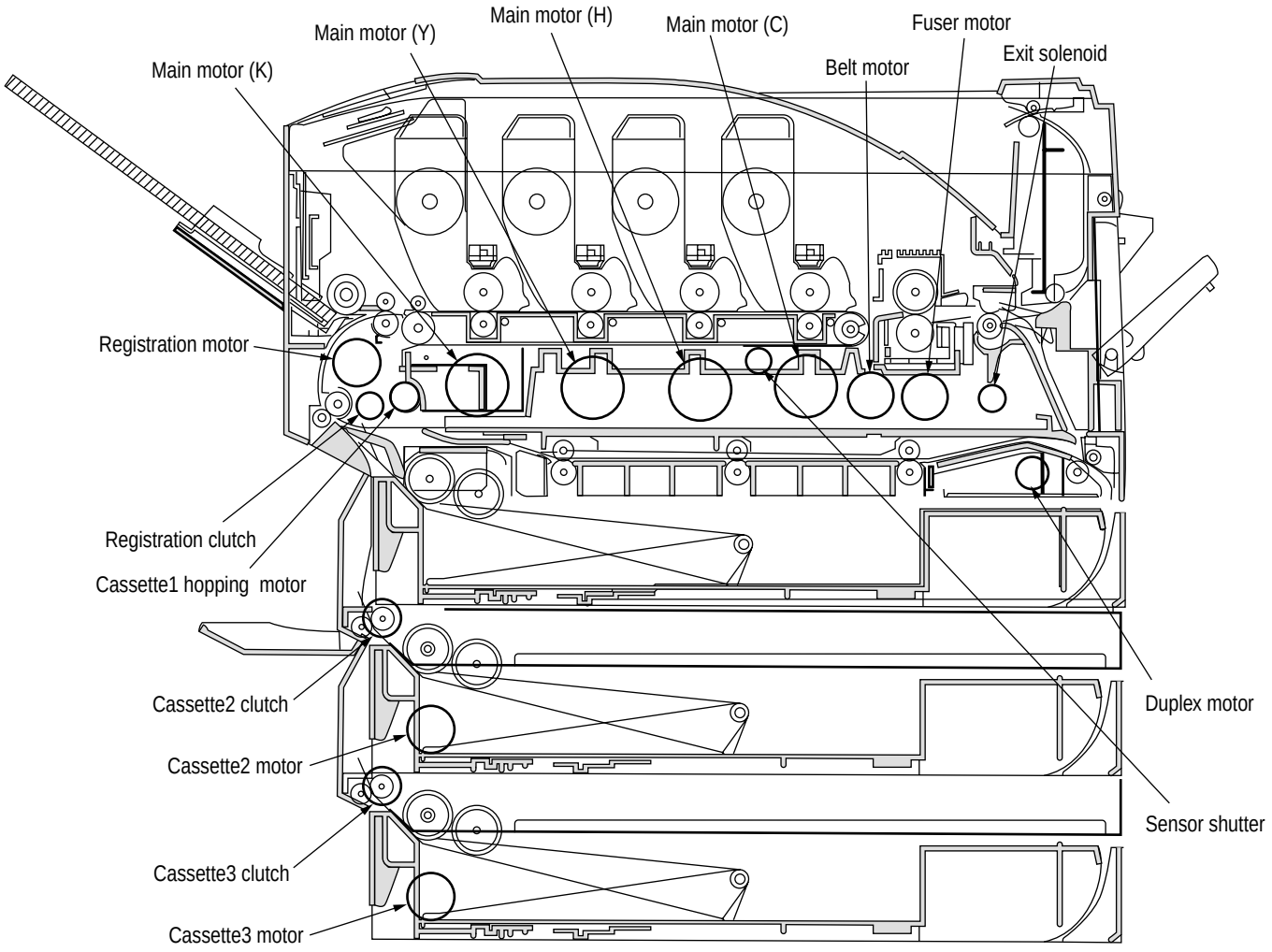


Figure 3-3

Table 3-2

| Unit Name Display | Driving Constrains | Constraints Display |
|---|---|---|
| BLACK-ID MOTOR | Remove all the IDs (B, Y, M and C) to drive the unit. | REMOVE ID |
| YELLOW-ID MOTOR MAGENTA-ID | Remove all the IDs (B, Y, M and C) to drive the unit. | REMOVE ID |
| MOTOR | Remove all the IDs (B, Y, M and C) to drive the unit. | REMOVE ID |
| CYAN-ID MOTOR | Remove all the IDs (B, Y, M and C) to drive the unit. | REMOVE ID |
| BELT MOTOR | Remove all the IDs (B, Y, M and C) to drive the unit. | REMOVE ID |
| FUSER MOTOR | – | – |
| REGISTRATION MOTOR | – | – |
| MAIN FEEDER MOTOR | Remove the cassette 1 to drive the unit. | EXIT TRAY1 CASSETTE |
| REGISTRATION CLUTCH | – | – |
| SENSOR SHUTTER | – | – |
| EXIT SOLENOID | – | – |
| DUP MOTOR(OPTION) | – | – |
| DUP REAR CLUTCH(OPTION) | – | – |
| CASSETTE 2 MOTOR (OPTION) | Remove the cassette 2 to drive the unit. | EXIT TRAY2 CASSETTE |
| CASSETTE2 FEED ROLLER (OPTION) | – | – |
| CASSETTE3 FEEDER MOTOR (OPTION) | Remove the cassette 3 to drive the unit. | EXIT TRAY3 CASSETTE |
| CASSETTE3 ROLLER CLUTCH (OPTION) | – | – |
| ID UP/DOWN | – | – |
| FAN1 TEST(POWER UNIT FAN) | – | – |
| FAN2 TEST(CONTROL BLOCK FAN) | – | – |

3.1.2.5 Test printing

This self-diagnostic routine is used when the internal test patterns of the PU are printed. Other test patterns are stored in the controller.

1. Go to the self-diagnosis (level 1) mode, and hold the ① and ⑤ keys down until "TEST PRINT" comes into view in the upper display (the ① key is for test item increment and the ⑤ key for test item decrement).
2. On the lower display, setting items applicable only to the test printing appear. Hold the ② and ⑥ keys down until a target item is displayed (the ② key is for item increment and the ⑥ key for item decrement). When the setting for the item is not required (left at its default), go to step 5.
3. With the press of the ③, ⑦, the setting item and its setting are displayed on the upper and lower parts, respectively.
   Pressing the ③ key increments a setting. Pressing the ⑦ key decrements a setting. (The last displayed setting is applied.) Repeat step 3 as necessary.

| SWITCH SCAN 00 |
|---|
| 1=H 2=L 3=H 4=L |

| Display | Setting | Function |
|---|---|---|
| PRINT EXECUTE | – | Starts printing at the press of + key/ Ends printing at the press of - key. |
| TEST PATTERN (TBD) | 1 | Selects one of printing patterns:<br>1: LED Head Drive Pattern<br>2: Color Registration Adjust Pattern<br>3: Reserved |
| | 2 | |
| | 3 | |
| CASSET | TRAY1 | Selects a paper-loading end.<br>Note: When the loading end is set to NONE, only the heater and drivable motors operate without the IDs and belt being driven. |
| | TRAY2 | |
| | TRAY3 | |
| | FF | |
| | NONE | |
| COLOR | ON | Selects between color-monochrome printings. |
| | OFF | |
| FUSER | ON | Selects between heater-on and -off. |
| | OFF | |
| DUPLEX | ON | Selects between duplex-on and -off.<br>Prints on both sides of one sheet of paper and then on the second sheet when ON is selected. |
| | OFF | |

- A value in the shaded section is initial. The set values are applicable only to this test mode (No writing into EEPROM is performed.)
- When the ③ key is pressed, with "PRINT EXECUTE" on the lower display after step 2, the test printing is executed using the values designated in steps 2 and 3. Pressing the ⑦ key suspends the test printing.

- Following messages are showing at warm-up and during printing.

| |
|---|
| P=*** T=*** U=***[###] |
| H=***% L=***[###] |

P: Number of Sheets Printed for Test (in prints)
U: Upper-Heater Temperature Measurement [Set Value] (in units of ˚C)
L: Lower-Heater Temperature Measurement [Set Value] (in units of ˚C)
T: Environmental Temperature Measurement (in units of ˚C)
H: Environmental Humidity Measurement (in units of %)

- The display is changed at the press of the ③ key.

| |
|---|
| KTR=*.**KV YTR=*.**KV |
| MTR=*.**KV CTR=*.**KV |

YTR, MTR, CTR and KTR mean the transfer voltage settings for colors (in KV).

- The display is changed at the press of the ③ key.

| |
|---|
| KR=*.**KV YR=*.**KV |
| MR=*.**KV CR=*.**KV |

YR, MR, CR and KR are the transfer voltage measurements for transfer roller colors (in KV).

| KR=*.**KV YR=*.**KV |
| --- |
| MR=*.**KV CR=*.**KV |

4. While "PRINT EXECUTE" is indicated in the lower display after the Item 2 procedure, press Key (3) to start test printing with the values set in Item 2 and 3 procedures.
   To suspend test printing, press Key ⑦.

   At the start of or during test printing, if any alarm listed under the Detail column in the table specified below is found, the corresponding alarm message appears on the operator panel and test printing is suspended. (For error details, see Sec. 3.1.2.9 Error Messages and their Details.)

   Print Patterns:
   Patterns 0, 8 ~15: Blank paper output

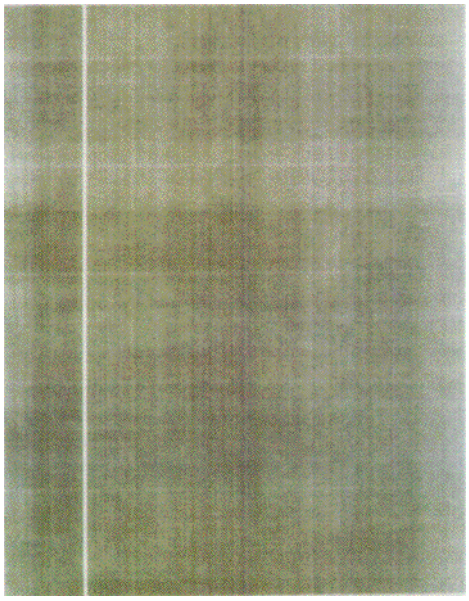

Pattern 1

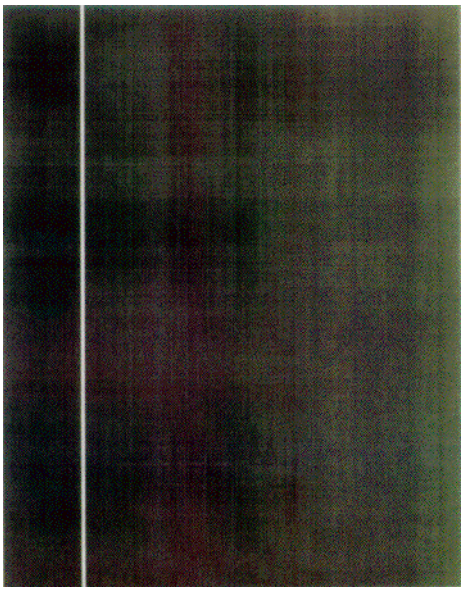

Pattern 2

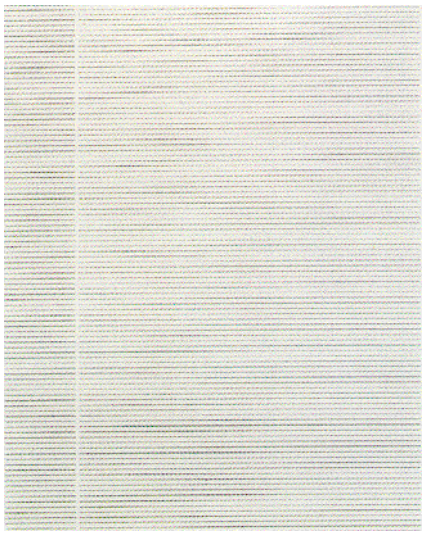

Pattern 3

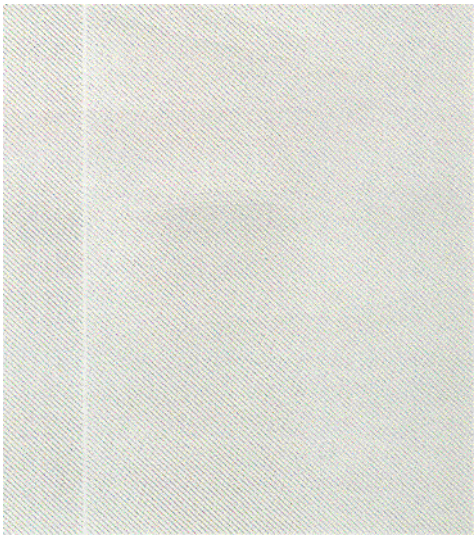

Pattern 4

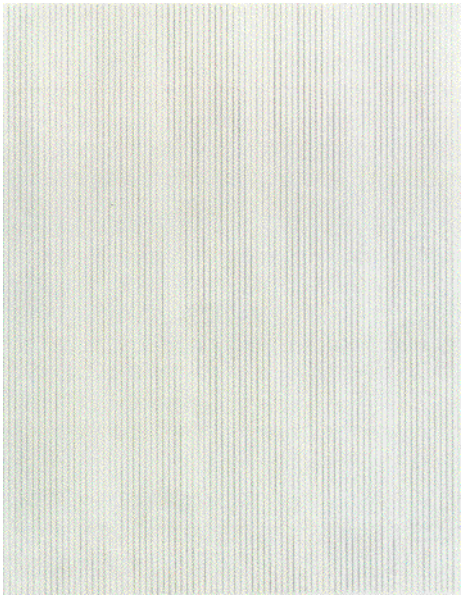

Pattern 5

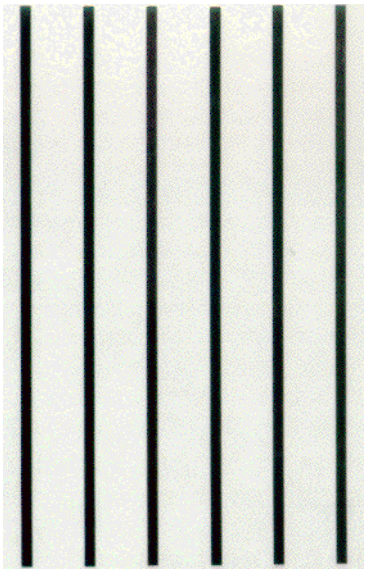

Pattern 6

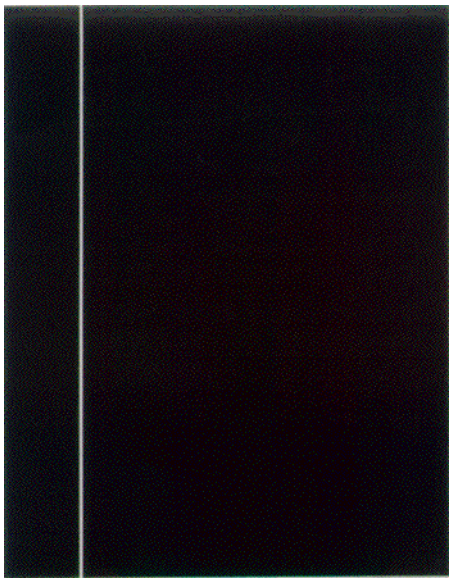

Pattern 7

5. Steps 2 through 4 to be repeated on an as needed basis.
6. Touch the (4) key to end the test (the display is restored to step 1).

3.1.2.6 NVM initialization

The self-diagnosis is used to initialize non-volatile memory.

1. Enter the self-diagnosis (Level 1) mode, and continue to press the ① and ⑤ keys until "NV-RAM INITIAL" appears on the upper display (the ① key is for test item increment and the ⑤ key for test item decrement).
2. The table No. to be initialized appears. There are two tables to be initialized.

   Hold the ② and ⑥ keys down until a target table No. shows up (the ② key is for table No. increment and the ⑥ key for table No. decrement).

| NV-RAM INITIAL |
|---|
| TABLE 1 |

3. The upper "NV-RAM INITIAL" starts blinking upon pressing the ③ key, and all the items in Table 3-3 are initialized by holding the key down for 10 seconds.
4. Press the ④ key to end the test (the display of step 1 is restored).

Table 3-3 (1/2) Initialization Items in Table 1

| Initialization Item | | Detail | Initial Value | Unit |
|---|---|---|---|---|
| Drum Counter | Black<br>Yellow<br>Magenta<br>Cyan | Initializes the internal counter after the replacement of each drum. | 0 | — |
| Belt Unit Counter | | Initializes the internal counter after the replacement of the belt unit. | 0 | — |
| Fuser Unit Counter | | Initializes the internal counter after the replacement of the fuser unit. | 0 | — |
| Toner Counter | Black<br>Yellow<br>Magenta<br>Cyan | Initializes the internal counter after the recovery from each toner low error. | 0 | — |

Table 3-3 (2/2) Initialization Items in Table 2

| Initialization Item | | Detail | Initial Value | Unit |
|---|---|---|---|---|
| Registration<br>Set.Point<br>x-axis | Yellow LED<br>Magenta LED<br>Cyan LED | Initializes the X-axis correction value for the LED head (Yellow/Magenta/Cyan). | 0 | 1/1200 inch |
| Registration<br>Set.Point<br>y-axis(Left) | Yellow LED<br>Magenta LED<br>Cyan LED | Initializes the Y-axis left-correction value for the LED head (Yellow/Magenta/Cyan). | 0 | 1/1200 inch |
| Registration<br>Set.Point<br>y-axis(Right) | Yellow LED<br>Magenta LED<br>Cyan LED | Initializes the Y-axis right-correction value for the LED head (Yellow/Magenta/Cyan). | 0 | 1/1200 inch |
| Engine Parameter | | Initializes all the items that have been set using levels 2 and 3. | | |

3.1.2.7 Consumable counter display

The self-diagnosis is used to indicate the consumable consumption status.

1. After entering the general self-diagnosis mode, hold the ① and ⑤ keys down until "CONSUMABLE STATUS" appears on the upper display (the ① key is for test item increment and the ⑤ key for test item decrement).
2. By pressing the ② and ⑥ keys, the consumption status of the consumables comes into view item by item (the press of the ③ and ⑦ keys is invalid).
3. Pressing the ④ key ends the test (the display of step 1 is restored).

| Item | Upper Display | Lower Display | Format | Unit | Ditail |
|---|---|---|---|---|---|
| Fuser Unit | FUSER UNIT | ******** IMAGES | DEC | Image | Shows the number of sheets fed after the installation of a new fuser unit to date. |
| Belt Unit | TR BELT UNIT | ******** IMAGES | DEC | Image | Shows the number of sheets fed after the installation of a new belt unit to date. |
| Black ID Unit | BLACK ID UNIT | ******** IMAGES | DEC | Image | Converts the number of revolutions of each color's ID unit after the installation of that unit to date into a count in letter- (A4-) size paper sheets and shows it. |
| Yellow ID Unit | YELLOW ID UNIT | ******** IMAGES | DEC | Image | |
| Magenta ID Unit | MAGENTA ID UNIT | ******** IMAGES | DEC | Image | |
| Cyan ID Unit | CYAN ID UNIT | ******** IMAGES | DEC | Image | |
| Black Toner | BLACK TONER | ***% | DEC | % | Shows the remaining amount of each color's toner. |
| Yellow Toner | YELLOW TONER | ***% | DEC | % | |
| Magenta Toner | MAGENTA TONER | ***% | DEC | % | |
| Cyan Toner | CYAN TONER | ***% | DEC | % | |

3.1.2.8 Consumable counter display - continuous

The self-diagnosis is used to indicate the consumable life-cycle consumption status.
The consumable life-cycle consumption status, a count not initialized even after the replacement of a consumable, is counted without break.

1. Enter the general self-diagnosis mode, and the ① and ⑤ keys down until the upper display "PRINTER STATUS" appears (the ① key is for item increment and the ⑤ key for item decrement).
2. When the ② and ⑥ keys are pressed, the life-cycle consumption status of the consumables shows up item by item (the press of the ③ and ⑦ keys is invalid).
3. Pressing the ④ key ends the test (flips back to the display of 1).

| Item | Upper Display | Lower Display | Format | Unit | Ditail |
|---|---|---|---|---|---|
| Total Number of Sheets Fed | TOTAL SHEETS FED | ******** PRINTS | DEC | Prints | Shows the total number of sheets fed, including blank paper. |
| Black Impressions | BLACK IMPRESSIONS | ******** IMAGES | DEC | Image | Converts the total number of revolutions of each color's ID into a count in letter paper sheets to set it. |
| Yellow Impressions | YELLOW INPRESSIONS | ******** IMAGES | DEC | Image | |
| Magenta Impressions | MAGENTA IMPRESSIONS | ******** IMAGES | DEC | Image | |
| Cyan Impressions | CYAN IMPRESSIONS | ******** IMAGES | DEC | Image | |

3.1.2.9 Error Messages and their Details

Error Messages.

| Error Message | Details |
|---|---|
| BLACK DRUM UP/DOWN ERROR | Black ID up/down error |
| BLACK DRUM UNIT FUSE CUT ERROR | Black ID unit fuse cut error |
| BLACK TONER SENSOR ERROR | Black toner sensor error |
| BLACK LED HEAD ERROR | Black LED head error |
| BLACK TONER LOW | Black toner is low. |
| BLACK TONER EMPTY | Black toner is empty. |
| BLACK DRUM LIFE OVER | Black ID life is over. |
| BLANCE ERROR | Balance error |
| BELT LIFE OVER | Belt life is over. |
| BELT UNIT FUSE CUT ERROR | Belt unit fuse cut error |
| BELT REFLECTION ERROR | Belt reflection error |
| BRK INST EXECUTE | BRK instruction is executed. |
| CYAN DRUM UP/DOWN ERROR | Cyan ID up/down error |
| CYAN DRUM UNIT FUSE CUT ERROR | Cyan ID unit fuse cut error |
| CYAN TONER SENSOR ERROR | Cyan toner sensor error |
| CYAN LED HEAD ERROR | Cyan LED head error |
| CYAN IRREGULAR ERROR | Cyan detected value error |
| CYAN REGISTRATION OUT RIGHT | Cyan out-of-registration value error (Right) |
| CYAN REGISTRATION OUT LEFT | Cyan out-of-registration value error (Left) |
| CYAN SENSOR ERROR RIGHT | Cyan right sensor error |
| CYAN SENSOR ERROR LEFT | Cyan left sensor error |
| CYAN TONER LOW | Cyan toner is low. |
| CYAN TONER EMPTY | Cyan toner is empty. |
| CYAN DRUM LIFE OVER | Cyan ID life is over. |
| CU FAN MOTOR ERROR | CU fan motor error |
| CALIBRATION ERROR | Calibration error |
| CUSTOM DIAGNOSTICS MODE | Custom diagnostic mode |
| DUPLEX I/F ERROR | Duplex unit I/F error |
| DISPOSAL TONER SENSOR ERROR | DISPOSAL TONER sensor error |
| DISPOSAL TONER NEARFULL | Waste toner container is near full. |
| DISPOSAL TONER FULL | Waste toner container is full. |
| DIAGNOSTICS MODE | Engine diagnostic mode |
| EEPROM SUM CHECK ERROR | EEPROM sum check error |
| EEPROM TIMEOUT | EEPROM timeout error |
| ENV TEMP SENSOR ERROR | ENV TEMP sensor error |
| ENGINE LIFE OVER | Engine life error |
| F/W LOST CONTROL | F/W has lost its control. |
| FRONT FEEDER STAGE POSITION | Front feeder stage position error. |
| FRONT COVER OPEN | Front cover is open. |
| FUSER LIFE OVER | Fuser life is over. |
| FUSER UNIT FUSE CUT ERROR | Fuser unit fuse cut error |
| FLASH SOFTWARE ERROR | FLASH software error |
| FLASH HARDWARE ERROR | FLASH hardware error |
| HUMIDITY SENSOR ERROR | Humidity sensor error |
| HOPPING ERROR TRAY1 | Tray1 hopping error |
| HOPPING ERROR TRAY2 | Tray2 hopping error |
| HOPPING ERROR TRAY3 | Tray3 hopping error |
| HOPPING ERROR FRONT FEEDER | Front feeder hopping error |

| Error Message | Details |
|---|---|
| HOPPING ERROR DUPLEX | Duplex unit hopping error |
| HOPPING ERROR TRAY4(PX703) | Tray4 hopping error |
| HOPPING ERROR TRAY5(PX703) | Tray5 hopping error |
| INPATH:FEED | Feed jam |
| INPATH:TRANSPORT | Transport jam |
| INPATH:EXIT | Exit jam |
| INPATH:DUPLEX INPUT | Duplex unit input jam |
| INPATH:DUPLEX ENTRY | Duplex unit entry jam |
| INPATH:DUPLEX REVERSAL | Duplex unit reversal jam |
| INFEED:TRAY1 | Tray1 hopping error |
| INFEED:TRAY2 | Tray2 hopping error |
| INFEED:TRAY3 | Tray3 hopping error |
| INFEED:FRONT FEEDER | Front feeder hopping error |
| INFEED:DUPLEX | Duplex unit hopping error |
| INFEED:TRAY4(PX703) | Tray4 hopping error |
| INFEED:TRAY5(PX703) | Tray5 hopping error |
| INITIALIZING | Initializing after turning on the printer |
| INITIALIZING | Initializing after a cover is opened/closed |
| INITIALIZING REGISTRATION ADJUST | Initializing after automatic color-registrat |
| JAM FEED | Feed jam |
| JAM TRANSPORT | Transport jam |
| JAM EXIT | Exit jam |
| JAM DUPLEX INPUT | Duplex unit input jam |
| JAM DUPLEX ENTRY | Duplex unit entry jam |
| JAM DUPLEX REVERSAL | Duplex unit reversal jam |
| LOWER HEATER LOW TEMPER | Lower heater low-temperature error |
| LOWER HEATER HIGH TEMPER | Lower heater high-temperature error |
| LOWER HEATER OPEN ERROR | Lower heater thermistor open-circuit error |
| LOWER HEATER SHORT ERROR | Lower heater thermistor short-circuit error |
| LED HEAD OVER HEAT | LED head overheat error |
| LEFT LOWER COVER OPEN | Left lower cover is open. |
| LEFT UPPER COVER OPEN | Left upper cover is open. |
| MISSING ERROR | Part missing error |
| FINISHER I/F ERROR | Finisher I/F error |
| MISSING BELT UNIT | Belt unit is not mounted. |
| MISSING FUSER UNIT | Fuser unit is not mounted. |
| MISSING BLACK DRUM | Black ID is not mounted. |
| MISSING CYAN DRUM | Cyan ID is not mounted. |
| MISSING MAGENTA DRUM | Magenta ID is not mounted. |
| MISSING YELLOW DRUM | Yellow ID is not mounted. |
| MAGENTA DRUM UP/DOWN ERROR | Magenta ID up/down error |
| MAGENTA DRUM UNIT FUSE CUT ERROR | Magenta ID unit fuse cut error |
| MAGENTA TONER SENSOR ERROR | Magenta toner sensor error |
| MAGENTA LED HEAD ERROR | Magenta LED head error |
| MAGENTA IRREGULAR ERROR | Magenta detected value error |
| MAGENTA REGISTRATION OUT LEFT | Magenta out-of-registration value error (Lef |
| MAGENTA REGISTRATION OUT RIGHT | Magenta out-of-registration value error (Rig |
| MAGENTA SENSOR ERROR LEFT | Magenta left sensor error |
| MAGENTA SENSOR ERROR RIGHT | Magenta right sensor error |
| MAGENTA TONER LOW | Magenta toner is low. |
| MAGENTA TONER EMPTY | Magenta toner is empty. |
| MAGENTA DRUM LIFE OVER | Magenta ID life is over. |

| Error Message | Details |
|---|---|
| OPECODE TRAP ERROR | Operation cord trap error |
| POWER LSI ERROR | Power unit LSI error |
| PANEL I/F ERROR | Opeator panel I/F error |
| PU FAN MOTOR ERROR | PU fan motor error |
| PAPER SIZE ERROR | Paper size error |
| PAPER END SELECTED TRAY | No paper is left in the selected tray. |
| PAPER END TRAY1 | No paper is left in Tray1. |
| PAPER END TRAY2 | No paper is left in Tray2. |
| PAPER END TRAY3 | No paper is left in Tray3. |
| PAPER END FRONT FEEDER | No paper is left at Front Feeder. |
| PAPER END TRAY4(PX703) | No paper is left in Tray4. |
| PAPER END TRAY5(PX703) | No paper is left in Tray5. |
| PAPER NEAR END TRAY1 | Paper is going out in Tray1. |
| PAPER NEAR END TRAY2 | Paper is going out in Tray2. |
| PAPER NEAR END TRAY3 | Paper is going out in Tray3. |
| PAPER NEAR END FRONT FEEDER | Paper is going out at Front Feeder. |
| PAPER NEAR END TRAY4(PX703) | Paper is going out in Tray4. |
| PAPER NEAR END TRAY5(PX703) | Paper is going out in Tray5. |
| RAM ERROR | RAM error |
| ROM SUM CHECK ERROR | ROM sum check error |
| SRAM ERROR | SRAM error |
| STACKER FULL | Stacker is full. |
| STACKER FULL FACE DOWN | Facedown stacker is full. |
| TRAY2 I/F ERROR | Tray2 I/F error |
| TRAY3 I/F ERROR | Tray3 I/F error |
| TRAY4 I/F ERROR(PX703) | Tray4 I/F error |
| TRAY5 I/F ERROR(PX703) | Tray5 I/F error |
| TOP COVER OPEN | Top cover is open. |
| UPPER HEATER LOW TEMPER | Upper heater low-temperature error |
| UPPER HEATER HIGH TEMPER | Upper heater high-temperature error |
| UPPER HEATER OPEN ERROR | Upper heater thermistor open-circuit error |
| UPPER HEATER SHORT ERROR | Upper heater thermistor short-circuit error |
| WARMING UP | Warming up |
| WDT ERROR | Watchdog timer timeout error |
| YELLOW DRUM UP/DOWN ERROR | Yellow ID up/down error |
| YELLOW DRUM UNIT FUSE CUT ERROR | Yellow ID unit fuse cut error |
| YELLOW TONER SENSOR ERROR | Yellow toner sensor error |
| YELLOW LED HEAD ERROR | Yellow LED head error |
| YELLOW IRREGULAR ERROR | Yellow detected value error |
| YELLOW REGISTRATION OUT LEFT | Yellow out-of-registration value error (Left |
| YELLOW REGISTRATION OUT RIGHT | Yellow out-of-registration value error (Righ |
| YELLOW SENSOR ERROR LEFT | Yellow left sensor error |
| YELLOW SENSOR ERROR RIGHT | Yellow right sensor error |
| YELLOW TONER LOW | Yellow toner is low. |
| YELLOW TONER EMPTY | Yellow toner is empty. |
| YELLOW DRUM LIFE OVER | Yellow ID life is over. |

| Error Message | Details |
|---|---|
| INPATH:FEED | Feed jam |
| INPATH:TRANSPORT | Transport jam |
| INPATH:EXIT | Exit jam |
| INPATH:DUPLEX INPUT | Duplex unit input jam |
| INPATH:DUPLEX ENTRY | Duplex unit entry jam |
| INPATH:REVERSAL | Duplex unit reversal jam |
| INFEED:TRAY1 | Tray1 hopping error |
| INFEED:TRAY2 | Tray2 hopping error |
| INFEED:TRAY3 | Tray3 hopping error |
| INFEED:FRONT FEEDER | Front feeder hopping error |
| INFEED:DUPLEX | Duplex unit hopping error |
| INFEED:TRAY4(PX703) | Tray4 hopping error |
| INFEED:TRAY5(PX703) | Tray5 hopping error |

INPATH --- Information of paper that stays on the paper path
INFEED --- Information of paper that stays at the paper entrance

### 3.1.3 SWA board adjustments

Destination Setting:

The SWA board, a main board, is a common ROM among destinations. When using the board for maintenance, its destination must be set using the system maintenance mode.

Placing Printer in System Maintenance Mode: (Not on view of users)

1. While holding the ② and ⑥ keys down, turn the power on.
2. Continue to press the ③ and ⑦ keys to select a value to be set, and press SELECT to fix the value.

Set Values and Destinations

| Set Value | ODA | OEL | APS | JP1 | JPOEM | OEMA | OEML |
|---|---|---|---|---|---|---|---|
| Destination | ODA | OEL | APS | Japan | Japan OEM | OEM | OEM |
| Remark | LETTER inch | A4 millimeter | A4 | A4 millimeter | A4 millimeter | | |

Model Name Setting:

The CU program automatically determines and switches between following printer specifications (LED head width, LED head resolution, presence or absence of Japanese fonts (Heisei fonts, Morisawa fonts)).

| LED Head Width | Resolution | With Kanji fonts | | Without Kanji fonts |
|---|---|---|---|---|
| | | Two Heisei fonts | Five Morisawa fonts | ODA/OEL/ASP |
| A4 | 600dpi | ML3010c | | OKI C7200 |
| | 1200dpi | / | / | OKI C7400 |
| A3 | 600dpi | ML3020c | / | OKI C9200 |
| | 1200dpi | ML3050c | / | OKI C9400 |

EEPROM Initialization

To initialize the EEPROM, enter the maintenance mode and select the EEPROM RESET item after the general start-up.

3.1.3.1 Short plug settings

The SWA board has two short plugs that can be set as follows:

Short Plug (WE1)
Sets flash ROM DIMM to connect WE signals.
(1-2 Short: Disconnects WE signals; 2-3 Short: Connects WE signals.)
Factory 2-3 Short Setting: Re-programmable flash ROM DIMM.

Short Plug (WE2)
(Not use)

3.1.3.2 Printings singly using controller-equipped printer

Menu Map Printing
The program versions, the controller block configuration and other configurations and settings of the printer are printed.
Operation: (Press of Switches)
Without HDD: “0” → “3” → “3”
With HDD: “0” → “0” → “3” → “3”

File List Printing
A list of files stored on a HDD or in ROM is printed.
Operation: (Press of Switches)
Without HDD: “0” → “3” → “1” → “3”
With HDD: “0” → “0” → “3” → “1” → “3”

Font List Printing (PCL)
A list of PCL fonts is printed.
Operation: (Press of Switches)
Without HDD: “0” → “3” → “1” → “1” → “3”
With HDD: “0” → “0” → “3” → “1” → “1” → “3”

Font List Printing (PS)
A list of PS fonts is printed.
Operation: (Press of Switches)
Without HDD: “0” → “3” → “1” → “1” → “1” → “3”
With HDD: “0” → “0” → “3” → “1” → “1” → “1” → “3”

Demo Printing
The demo patterns for destinations stored in ROM are printed.
Operation: (Press of Switches)
Without HDD: “0” → “3” → “1” → “1” → “1” → “1” → “3”
With HDD: “0” → “0” → “3” → “1” → “1” → “1” → “1” → “3”

Ethernet Board Self-Diagnostic Printing
When the printer is equipped with an Ethernet board, holding down the SW on the Ethernet board for two seconds or more runs self-diagnostics and prints its result.

## 3.2 Adjustments after Parts Replacement

Adjustment to be implemented after each part replacement is described below.
Adjustment and correction of color registration are always required for each part replacement.

| Replaced Part | *Adjustment* |
|---|---|
| LED Head | Color balance adjustment |
| Drum Cartridge (Y, M, C, K) | Not required. |
| Fuser Unit | Not required. |
| Belt Cassette Assy | Not required. |
| PU (K71 Board) | Re-mounting the EEPROM used prior to the replacement *Note |
| CU (SWA Board) | Re-mounting the EEPROM used prior to the replacement *Note |

**Note:* When the EEPROM of the PU (K71 Board) is replaced to a new one, color balance must be adjusted.

### 3.2.1 Precautions in replacing engine controller board

When replacing the engine controller board (71K PWB), demount the EEPROM from the board and mount it on a new board (for errors other than those of engine EEPROM).
When the “SERVICE CALL XX” (an engine EEPROM error) message is displayed on the operator panel, the EEPROM must be replaced with new one. In this case, perform the operation described in Section 3.2.2.

### 3.2.2 Precautions in replacing EEPROM

When the EEPROM is not demounted from the board and not mounted on new one at the time of engine controller board (71K PWB) replacement, or when the EEPROM is replaced with new one, the version read (fuse cut) function is disabled. The printer must be switched from the factory mode to the shipping mode using the following setting procedure:

Changing the setting using operator panel

1. Remove the main controller board.
2. While holding the ① and ⑤ keys down, turn the power on to enter the engine maintenance mode (level 1).
3. With “ENGINE DIAG MODE XX.XX” on the display, press the ② and ④ keys to enter the engine maintenance mode (level 3).
4. Press the ① and ⑤ keys until “LOCAL PARAMETER SET” appears on the upper display.
5. Press the ② and ⑥ keys until “FACTORY WORKING MODE” appears.
6. While “FACTORY WORKING MODE” is being displayed, use the ③ and ⑦ keys to select a setting value.
7. Select “SHIPPING MODE” (fuse cut enabled), press the ③ and ⑦ keys in combination. Then, the mode name stops blinking and the set value is registered.

***Note!*** The life information on the belt, toner, IDs etc. is cleared due to replacement of the EEPROM. Take note that an error occurs in the each unit's life count until the unit is replaced. Following is counts cleared after the replacement of the EEPROM.

| Item | Count | Description of Count |
|---|---|---|
| Fuser | Fuser Life | A value in letter paper sheets converted from the number of sheets fed after the installation of a new fuser unit. |
| Transfer Belt | Transfer Belt Life | A value in letter paper sheets converted from the number of sheets fed after the installation of a new belt unit. |
| Black Imaging Drum<br>Cyan Imaging Drum<br>Magenta Imaging Drum<br>Yellow Imaging Drum | Each Imaging Drum Life | A value in letter paper sheets converted from the installation of a new ID unit. |
| Black Toner<br>Cyan Toner<br>Magenta Toner<br>Yellow Toner | Toner Consumption | The number of dots printed. |
| Total Sheets Feed | Printer Life | The total number of pages printed. |
| Black Impressions<br>Cyan Impressions<br>Magenta Impressions<br>Yellow Impressions | Total Number of Pages Printed | The number of pages printed after the installation of a new ID unit. |

Counts except the count Total Sheets Feed are cleared upon replacement of the units, respectively, where errors are corrected.

### 3.2.3 EEPROM replacement after SWA board replacement

To replace the SWA board, remove the EEPROM on the board and include the EEPROM on a newly installed board (to allow a new board to inherit user-defined settings and font installation information).
When the user's EEPROM is unusable due to its problem, use the new one on the new board, where the destination of the new board must be set. See Section 3.1.3 "SWA board adjustments" for the setting procedure.

## 3.3 Color Balance Adjustment

Color balance has been adjusted appropriately when a printer is shipped from the plant. However, it may be out of the appropriate balance during use. In such a case, color balance should be modified.

***Note:*** Density of each color depends on each other. Therefore, adjustment must be repeated several times to reach the correct color balance.

(1) Set A4 papers in the tray specified on the operator panel.

(2) Press ⓪ several times to display [COLOR MENU].

(3) Press ① or ⑤ to display [COLOR BALANCE CORRECTION/PATTERN PRINT].

(4) Press ③ to start test printing.

(5) Press ① to display [COLOR BALANCE CORRECTION/RESET].

(6) Choose the number of the color closest to the [(] part on the test pattern.
If the selected color is [00], the color balance is correct and no adjustment is required.
If it is not [00], the color balance should be adjusted in the procedures below.

(7) Press ② or ⑥ several times to display the value selected in Step (6).

(8) Press ③ to start test printing.

(9) Repeat the steps (6)~(8) to approximate the color at the [(] part on the test pattern to [00] as much as possible.

(10) Press ④ to display [ON LINE].

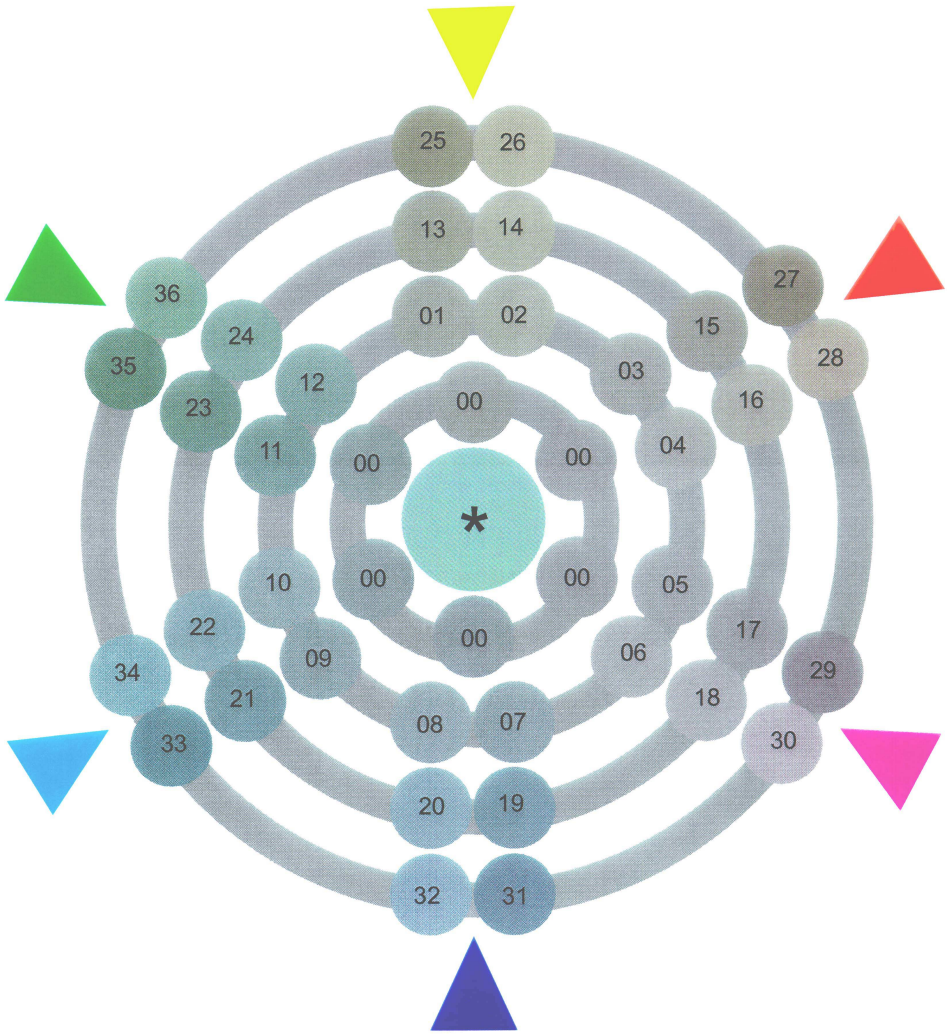
25
26
13
14
27
36
01
02
15
24
28
35
12
03
16
23
00
11
00
00
04
*
10
00
00
05
22
00
17
09
06
34
29
21
18
08
07
33
30
20
19
32
31

# 4. PERIODIC MAINTENANCE

## 4.1 Parts Replaced Periodically

It is recommended that the following parts be periodically replaced, as specified, by users (when they are not replaced, the print quality is not assured and printer problems may result).

| Parts Name | Time of Replacement | Condition for Replacement | Adjustment after Replacement |
|---|---|---|---|
| Large-Capacity Toner Cartridge | Time when " " is displayed. | 10,000 pages are printed. | Replace the toner cartridge. |
| Toner Cartridge | Toner Cartridge Time when " " is displayed. | 5,000 pages are printed. | Replace the toner cartridge. |
| I/D Unit | ID Time when " " is displayed. | 20,000 pages are printed (3P/job). | Reset the drum counter after the replacement of the drum. |
| Fuser Unit | Fuser Unit Time when" " is displayed. | 60,000 pages are printed. | Reset the fuser counter. |
| Transfer Belt Unit | Belt Unit Time when " " is displayed. | 60,000 pages are printed. | Reset the belt counter. |

**Note:** The The above periodic parts replacement is performed by users.

## 4.2 Cleaning

Clean the inside and outside of the printer with waste and a small vacuum cleaner (hand cleaner) as the case may be.

***Caution!*** Do not touch the terminals of the image drums, the LED lens array and the LED head connector.

## 4.3 Cleaning LED Lens Array

When white belts or lines (void, light areas) run the length of a printed page, clean the LED lens array.

***Caution!*** Be sure to use the LED head cleaner to clean the LED lens array (The LED head cleaner is packed together with the toner cartridge).

White belt, White line (Void, Light area)

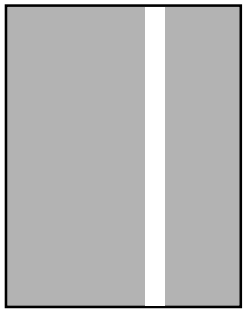

## 4.4 Cleaning Pickup Roller

When lines run the length of a printed paper, clean the pick up roller.

***Caution!*** Use a soft cloth so as not to damage the roller surface.

# 5. TROUBLESHOOTING PROCEDURES

## 5.1 Before Troubleshooting

(1) Check the basic check items covered in the user's manual.

(2) Obtain much information about problems from users whenever possible.

(3) Perform inspections in conditions close to those in which problems occurred.

## 5.2 Checking before Troubleshooting Image Problems

(1) Is the printer operating environment proper?

(2) Has the consumables (toner, drum cartridges) been replaced properly?

(3) Is the paper proper? Refer to the paper specification.

(4) Are the image drum cartridges placed properly?

## 5.3 Precautions in Troubleshooting Image Problems

(1) Do not touch the surface of the OPC drum with hands or allow foreign matter to contact it.

(2) Do not expose the OPC drum to direct sunlight.

(3) Do not touch the fuser unit with hands as it is hot.

(4) Do not expose the image drums to light for five minutes or more at room temperature.

## 5.4 Preparation for Troubleshooting

(1) Control panel display

The failure status of the printer is provided on the LCD (liquid crystal display) of the operator panel.
Take appropriate corrective actions according to messages appeared on the LCD.

## 5.5 Troubleshooting

When problems occur in the printer, troubleshoot them using the following procedure:

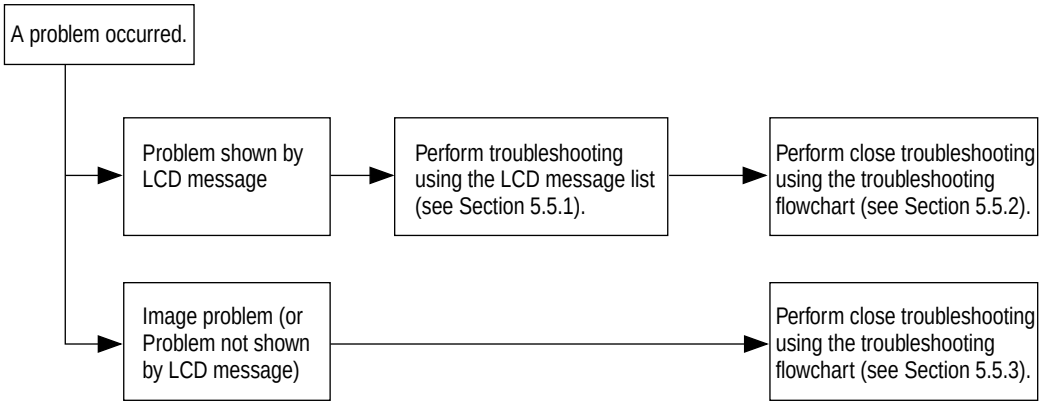

### 5.5.1 LCD messages list

When detects unrecoverable errors, the printer provides the following service call error message:
Service Call
nnn : Error

***Note!*** nnn is an error code.

While a service call appears, an error code accompanied by its error information is shown on the lower LCD. Error codes, their meanings and actions to be taken are listed in Table 5-1-1.

Table 5-1-1 Operator Alarms (1/5)

| Message | Cause | Error Description | | Solutions |
|---|---|---|---|---|
| Service Call<br>001: Error<br>~<br>011: Error | CPU Exception | Is the error message displayed again?<br>Is the error message displayed again? | Yes<br>Yes | Turn the printer off/on.<br>Replace the SWA board.<br>(The EEPROM needs replacement.) |
| Service Call<br>020: Error | CU ROM Hash Check Error 1 | Is the program ROM DIMM installed properly?<br>Can the printer recover from the error by replacing the program ROM DIMM? | No<br><br>Yes<br>No | Re-install the program ROM DIMM.<br><br>Replace the program ROM DIMM.<br>Replace the SWA board.<br>(The EEPROM needs replacement.) |
| Service Call<br>030: Error | CU Slot1 DIMM RAM Check Error | Is the concerned RAM DIMM installed properly?<br>Can the printer recover from the error by replacing the RAM DIMM? | No<br>Yes<br>No | Re-install the concerned RAM DIMM.<br>Replace the RAM DIMM.<br>Replace the SWA board.<br>(The EEPROM needs replacement.) |
| Service Call<br>031: Error | CU Slot2 DIMM RAM Check Error | Is the concerned RAM DIMM installed properly?<br>Can the printer recover from the error by replacing the RAM DIMM? | No<br>Yes<br>No | Re-install the concerned RAM DIMM.<br>Replace the RAM DIMM.<br>Replace the SWA board.<br>(The EEPROM needs replacement.) |
| Service Call<br>032: Error | CU Slot3 DIMM RAM Check Error | Is the concerned RAM DIMM installed properly?<br>Can the printer recover from the error by replacing the RAM DIMM? | No<br>Yes<br>No | Re-install the concerned RAM DIMM.<br>Replace the RAM DIMM.<br>Replace the SWA board.<br>(The EEPROM needs replacement.) |
| Service Call<br>033: Error | CU Slot4 DIMM RAM Check Error | Is the concerned RAM DIMM installed properly?<br>Can the printer recover from the error by replacing the RAM DIMM? | No<br>Yes<br>No | Re-install the concerned RAM DIMM.<br>Replace the RAM DIMM.<br>Replace the SWA board.<br>(The EEPROM needs replacement.) |
| Service Call<br>034: Error | RAM Configuration Error.<br>The CU RAM installation or derwas not followed. | Is the installation order followed?<br><br>Can the printer recover from the error by replacing the RAM DIMMs? | No<br>Yes<br>No | Correct the installation order.<br>Replace the RAM DIMMs.<br>Replace the SWA board.<br>(The EEPROM needs replacement.) |
| Service Call<br>035: Error | Slot1 RAM Spec Error.<br>The CU RAM Slot1 DIMM specification is not supported. | Is the RAM DIMM a genuine part?<br>Is the concerned RAM DIMM installed properly?<br>Can the printer recover from the error by replacing the RAM DIMM? | No<br>No<br>Yes<br>No | Use a genuine RAM DIMM.<br>Re-install the concerned RAM DIMM.<br>Replace the RAM DIMM.<br>Replace the SWA board.<br>(The EEPROM needs replacement.) |
| Service Call<br>036: Error | Slot2 RAM Spec Error.<br>The CU RAM Slot2 DIMM specification is not supported. | Is the RAM DIMM a genuine part?<br>Is the concerned RAM DIMM installed properly?<br>Can the printer recover from the error by replacing the RAM DIMM? | No<br>No<br>Yes<br>No | Use a genuine RAM DIMM.<br>Re-install the concerned RAM DIMM.<br>Replace the RAM DIMM.<br>Replace the SWA board.<br>(The EEPROM needs replacement.) |
| Service Call<br>037: Error | Slot3 RAM Spec Error.<br>The CU RAM Slot3 DIMM specification is notsupported. | Is the RAM DIMM a genuine part?<br>Is the concerned RAM DIMM installed properly?<br>Can the printer recover from the error by replacing the RAM DIMM? | No<br>No<br>Yes<br>No | Use a genuine RAM DIMM.<br>Re-install the concerned RAM DIMM.<br>Replace the RAM DIMM.<br>Replace the SWA board.<br>(The EEPROM needs replacement.) |
| Service Call<br>038: Error | Slot4 RAM Spec Error.<br>The CU RAM Slot4 DIMM specification is notsupported. | Is the RAM DIMM a genuine part?<br>Is the concerned RAM DIMM installed properly?<br>Can the printer recover from the error by replacing the RAM DIMM? | No<br>No<br>Yes<br>No | Use a genuine RAM DIMM.<br>Re-install the concerned RAM DIMM.<br>Replace the RAM DIMM.<br>Replace the SWA board.<br>(The EEPROM needs replacement.) |

Table 5-1-1 Operator Alarms (2/5)

| Message | Cause | Error Description | | Solutions |
|---|---|---|---|---|
| Service Call 040: Error | CU EEPROM Error | Can the printer recover from the error by replacing the EEPROM on the CU board? | Yes | Replace the EEPROM. (Settings of the user must be restored on the new.) |
| | | | No | Replace the SWA board. (The EEPROM needs replacement.) |
| Service Call 041: Error | U Flash Error. On-CU-board Flash ROM Error | Does the error message appear again? | Yes | Replace the SWA board. (The EEPROM needs replacement.) |
| Service Call 050: Error | Operator Panel Error | Does the error message appear again? | Yes | See the flowchart for the problems with no LCD message displayed. |
| Service Call 051: Error | CU Fan Error. On-CU-board CPU Cooling Fan Problem | Is the on-CU-board connector connected properly? | No | Connect the connector properly. |
| | | Can the printer recover from the error by replacing the fan? | Yes | Replace the fan. |
| | | | No | Replace the SWA board. (The EEPROM needs replacement.) |
| Service Call 063: Error | Network Comm.Error. CU ~ NIC H/W I/F Problem | Is the network board installed properly? | No | Install the network board properly. |
| | | Can the printer recover from the error by replacing the network board? | Yes | Replace the network board. |
| | | | No | Replace the SWA board. (The EEPROM needs replacement.) |
| Service Call 070: Error | CANT_HAPPEN. PS F/W Problem Detection | Is it recovered by turning the printer off/on. | No | Replace the SWA board. (The EEPROM needs replacement.) |
| Service Call 072: Error | Engine Communication Error PU ~ CU I/F Error | Is the CU Assy installed properly? | No | Install the CU Assy properly. |
| | | Can the printer recover from the error by replacing the SWA board? | Yes | Replace the SWA board. (The EEPROM needs replacement.) |
| | | | No | Replace the PU board. |
| Service Call 073: Error ~ 075: Error | Video Overrun Detect | Is the CU Assy installed properly? | No | Install the CU Assy properly. |
| | | Can the printer recover from the error by replacing the SWA board? | Yes | Replace the SWA board. (The EEPROM needs replacement.) |
| Service Call 100/101:Error | Error detected at Engine ROM Checksum when turned on. | Does the error repeat? | No | Replace the PU board. |
| | | | Yes | Replace the engine control board (71K). |
| Service Call 102: Error | Error detected at Engine RAM Read/Write when turned on. | Does the error repeat? | Yes | Replace the engine control board (71K). |
| Service Call 103: Error | Error detected at Engine SRAM Read/Write when turned on. | Does the error repeat? | Yes | Replace the engine control board (71K). |
| Service Call 104: Error | Error detected at Engine EEPROM Checksum when turned on. | Does the error repeat? | Yes | Replace the engine control board (71K). |
| Service Call 105: Error | EEPROM not detected when turned on. | No EEPROM? | Yes | Confirm the existence of EEPROM. Without it, mount an EEPROM. |
| | | Does the error repeat? | Yes | Replace the engine control board (71K). |
| Service Call 106: Error | Error detected at Engine Control Logic. | Does the error repeat? | Yes | Replace the engine control board (71K). |
| Service Call 120: Error ~ 122: Error | Error detected at the Power unit cooling fan in the Controller cavity. | 1) Is the error message displayed? | Yes | Turn off/on the printer. |
| | | 2) Does the error repeat? | Yes | Replace the Fan motor. |
| Service Call 123: Error | Inappropriate ambient RH detected by a sensor. | 1) Is the error message displayed? | Yes | Turn off/on the printer. |
| | | 2) Does the error repeat? | Yes | Replace the RH sensor. |
| Service Call 124: Error | Inappropriate ambient temp. detected by a sensor. | 1) Is the error message displayed? | Yes | Turn off/on the printer. |
| | | 2) Does the error repeat? | Yes | Replace the temperature sensor. |

Table 5-1-1 Operator Alarms (3/5)

| Message | Cause | Error Description | | Solutions |
|---|---|---|---|---|
| Service Call 125: Error | Error detected at the MT home position. | 1) Is the error message displayed? | Yes | Turn off/on the printer. |
| | | 2) Does the error repeat? | Yes | Replace the MT. |
| Service Call 130: Error | Temperature rise at the LED head detected. | 1) Is the error message displayed? | Yes | Turn off the printer, leave it for 30 min and then turn it on again. |
| | | 2) Does the error repeat? | Yes | Replace the LED head unit. |
| Service Call 131: Error ~ 134: Error | No LED head unit detected when turning on the printer or closing the cover. | 1) Is the error message displayed? | Yes | Verify the installation of the LED head. |
| | | 2) Is the LED head mounted properly? | Yes | Turn off/on the printer. |
| | | 3) Does the error repeat? | Yes | Replace the LED head Assy. |
| Service Call 140: Error ~ 142: Error | Error detected with the D located at appropriate position. | 1) Is the error message displayed? | Yes | Turn off/on the printer. |
| | | 2) Does the error repeat? | Yes | Replace the Drum Assy. |
| Service Call 150: Error ~ 153: Error | Fuse in the ID unit has not been blown. | Is the ID unit mounted properly? | Yes | Confirm the cable connection, or replace the Engine board. |
| Service Call 154: Error | Fuse in the Belt unit has not been blown. | Is the Belt unit mounted properly? | Yes | Confirm the cable connection, or replace the Engine board. |
| Service Call 155: Error | Fuse in the Fuser unit has not been blown. | Is the Fuser unit mounted properly? | Yes | Confirm the cable connection, or replace the Engine board. |
| Service Call 160: Error ~ 163: Error | Error detected by Toner sensor. | 1) Is the error message displayed? | Yes | Replace Toner sensor or Assy (Y71-PWB). |
| | | 2) Does the error repeat? | Yes | Same as the above. |
| Service Call 170: Error 171: Error 174: Error 175: Error | Short or open circuit detected at the Fusert hermistor. (H or L temperature error) | 1) Is the error message displayed? | Yes | Turn off/on the printer. |
| | | 2) Does the error repeat? | Yes | Replace the Thermistor and turn off the printer. Leave it for 30 min. |
| Service Call 172: Error 176: Error | High temperature error detected at Thermistor. | 1) Is the error message displayed? | Yes | Turn off/on the printer. |
| | | 2) Does the error repeat? | Yes | Replace the Thermistor and turn off the printer. Leave it for 30 min. |
| Service Call 173: Error 177: Error | Low temperature error detected at Thermistor. | 1) Is the error message displayed? | Yes | Turn off/on the printer. |
| | | 2) Does the error repeat? | Yes | Replace the Thermistor or heater and turn off the printer. |
| Service Call 181: Error ~ 186: Error | Communication failure with an option unit detected by Engine | 1) Is the error message displayed? | Yes | Turn off/on the printer. |
| | | 2) Does the error repeat? | Yes | Replace the option unit. |
| Close Cover 310: CCCC CoverOpen (* = A4, B4 etc.) | Printer engine cover is open. | 1) Is the Top cover open? | Yes | Close the Top cover. |
| | | 2) Does the Cover switch operatenormally? | Yes | Close the Side cover. |
| | | | No | Replace the Cover switch. |
| Check Fuser 320: Fuser Error | No Fuser unit detected when turning on the printer or closing the cover. | 1) Is the error message displayed? | Yes | Confirm the existence of the unit. |
| | | 2) Is the Fuser unit mounted properly? | No | Re-install the Fuser unit and turn off/on the printer. |
| | | 3) Does the error repeat? | Yes | Replace the Fuser unit Assy. |
| Check Belt 330: Belt Error | No Belt unit detected when turning on the printer or closing the cover. | 1) Is the error message displayed? | Yes | Confirm the existence of the unit. |
| | | 2) Is the Belt unit mounted properly? | No | Re-install the Belt unit and turn off/on the printer. |
| | | 3) Does the error repeat? | Yes | Replace the Belt unit Assy. |
| Check Drum 340~343: Drum Error | No ID unit detected when turning on the printer or closing the cover. | 1) Is the error message displayed? | Yes | Confirm the existence of the unit. |
| | | 2) Is the ID unit mounted properly? | No | Re-install the ID unit and turn off/on the printer. |
| | | 3) Does the error repeat? | Yes | Replace the ID unit Assy. |

Table 5-1-1 Operator Alarms (4/5)

| Message | Cause | Error Description | | Solutions |
|---|---|---|---|---|
| Install New Drum<br>350: Y Drum Life<br>351: M Drum Life<br>352: C Drum Life<br>353: K Drum Life | End of the ID unit life. more copies printed. | Is it displayed soon after the ID unit replacement? | Yes<br>No | Confirm the life of the ID unit.<br>Replace the ID unit. |
| Install Duplex Unit<br>360: No Duplex unit | The Duplex unit is removed from the printer. | Recovered if the Duplex unit is inserted again? | Yes<br>No | Normal<br>Replace the Duplex unit or Engine board. |
| Check DUPLEX<br>370: Paper Jam | Paper jam detected after paper reverse in the Duplex unit. | 1) Is a paper jammed in the Duplex unit? | Yes<br>No | Remove the jammed paper.<br>Check the Duplex unit, or replace it. |
| Check DUPLEX<br>371: Paper Jam | Paper jam detected at the Duplex unit | 1) Is a paper jammed in the Duplex unit? | Yes<br>No | Remove the jammed paper.<br>Check the Duplex unit, or replace it. |
| Check DUPLEX<br>372: Paper Jam | Paper jam detectedd uring paper feed from the Duplex unit. | 1) Does misfeed occur in the Duplex unit? | Yes<br>No | Remove the misfed paper and close the cover.<br>Check the Duplex unit, or replace it. |
| Open Side Cover<br>380: Paper Jam | Paper jam during paper feed from the Cassette 1, 2, 3, 4 or 5. | 1) Does misfeed occur in the specified cassette? | Yes<br>No | Remove the jammed paper and install the cassette.<br>Check the Cassette 1, 2, 3, 4 or 5, or replace it. |
| Open Stacker Cover<br>381: Paper Jam | Paper jam detected btwn the B ID and Fuser. | 1) Is a paper jammed between the Y ID and Fuser?<br>2) Is the load on the Fuser unit normal? | Yes<br>No | Remove the jammed paper.<br>Replace the Fuser unit. |
| Open Stacker Cover<br>382: Paper Jam | Paper jam detected in the Fuser unit or btwn the Fuser and paper ejection. | 1) Is a paper jammed in the Fuser unit or between the Y ID and Fuser unit?<br>2) Is the Paper eject switch work normally? | Yes<br>No | Remove the jammed paper.<br>Replace the Fuser unit. |
| Open Stacker Cover<br>383: Paper Jam | Paper jam detected on paper entering the Duplex unit. | 1) Is a paper jammed at the entrance of the Duplex unit or in the unit? | Yes<br>No | Remove the jammed paper and close.<br>Check the Duplex unit, or replace it. |
| Check MP Tray<br>390: Paper Jam | Paper jam during paper feed from the MP Tray. | 1) Does misfeed occur around the MP Tray? | Yes<br>No | Remove the misfed paper and close the cover.<br>Check the MP Tray, or replace it. |
| Check Tray *<br>391~395: Paper Jam | Paper jam detected btwn a cassette and the B ID. | 1) Is a paper jammed around the cassette or between the B ID and cassette.<br>2) Does the Paper entry switch operate normal? | Yes<br>No | Remove the jammed paper.<br>Replace the Paper entry switch. |
| Open Stacker Cover<br>400: Paper Size Error | Paper in a size different (45 mm or more) from the specification detected at the Printer engine. | 1) Is the paper in a custom size?<br>2) Is the paper in the standard size? | Yes<br>Yes<br>No | No action required.<br>Adjust the Paper size guide of the cassette.<br>Replace the Paper size board (PXC PWB). |
| Toner Low<br>410: Yellow<br>411: Magenta<br>412: Cyan<br>413: Black | Toner in one of the four colors is running short. | 1) Is the specified toner cartridge almost empty?<br>2) Does the Toner sensor of the specified cartridge operate normally? | Yes<br>No | Replace it with a new toner kit.<br>Replace the Toner sensor for the specified color. |
| Remove Printed Papers<br>480: Stacker Full | The stacker for ejected papers is full. | 1) Is the stacker full?<br>2) Does the Stacker full sensor operate normally? | Yes<br>No | Remove papers from the stacker.<br>Replace the Stacker full sensor. |

Table 5-1-1 Operator Alarms (5/5)

| Message | Cause | Error Description | | Solutions |
|---|---|---|---|---|
| Load *** Papers 490: No paper in the MP Tray (*** = A4, B5 etc.) | The specified cassette has no paper or is removed. Or, the cassette be ingused for printing has no more paper. | 1) No paper in MT? | Yes | Load papers in MT. |
| | | 2) Does the Paper out sensor operate normally? | No | Replace the Paper out sensor. |
| Load *** Papers 491~495: No paper in the Tray * (*** = A4, B5 etc.) | No paper in the Cassette 1, 2, 3, 4 or 5 detected. | 1) No paper in the specified cassette? | Yes | Load papers in the specified cassette. |
| | | 2) Does the Paper out sensor operate normally? | No | Replace the Paper out sensor of the specified cassette. |
| Replace Belt | The belt counter has reached the life value. | 1) Is the error message displayed? | Yes | Check the belt life. |
| | | 2) Does the error occur soon after Belt unit replacement? | No | Replace the Belt unit immediately or at the next maintenance. |
| Replace Fuser | The fuser counter has reached the lifevalue | 1) Is the error message displayed? | Yes | Check the fuser life. |
| | | 2) Does the error occur soon after Fuser unit replacement? | No | Replace the Fuser unit immediately or at the next maintenance. |
| Job Offset Home Error | The Job offset assy does not operate or cannot detect the home position. | Does the Job offset assy operate normally? | Yes | Replace the Job offset sensor. |
| | | | No | Replace the Job offset motor or Engine board. |
| Running Short of Paper in Tray * | Running short of paper detected | Does only small mount of papers (approx. 30 sheets or less) remain? | Yes | Load papers. |
| | | | No | Check the Paper near end sensor. |
| Disc Operation Error | HDD cannot be written. | Is the operating procedure correct? | No | Confirm the procedure in the manual. |
| | | | Yes | Replace the HDD as it is broken. |

5.5.2 Preparation for troubleshooting

(1) Display on operation panel

The failure status of the printer is provided on the LCD (liquid crystal display) of the operator panel.
Perform appropriate troubleshooting according to messages on the LCD.

| No. | Failure | Flowchart No. |
|---|---|---|
| 1 | Printer Malfunction after Turn-on | ① |
| 2 | Jam Error Paper | |
| | Loading Jam (1st tray) | ②-1 |
| | Paper Loading Jam (Multipurpose tray) | ②-2 |
| | Paper Feed Jam | ②-3 |
| | Paper Exit Jam2-4 | ②-4 |
| | DUPLEX Jam | ②-5 |
| 3 | Paper Size Error | ③ |
| 4 | I/D Up-and-Down Operation Error | ④ |
| 5 | Fuser Unit Error | ⑤ |
| 6 | Motor Fan Error | ⑥ |

***Note:*** When replacing the engine board (71K PWB), demount the EEPROM chip on the board and mount it on a new board.

(2) CU Assy troubleshooting

The CU Assy does not operate.

Is the error message displayed?

YES Follow the message procedure for handling the error.

NO Are the upper and lower lines of LCD on the operator panel black?

NO Check the power supply voltage. 3.3V, 5V
3.3V: Vacant ICOP 20pin
5V: Vacant PANEL 5pin

NO Replace the power supply voltage

YES Check the PU board and the operator panel board.

YES Is ROM DIMM A mounted properly?

NO Insert the program IDMM into the ROM DIMM A properly. When the printer is not recovered from the error, replace the CU board.

YES Replace the CU board. Demount the EEPROM from the board and mount it on a new board.

① The printer does not operate properly after power-on.

- Turn the printer off and on again.
- Is ■■■■■■■■■■■■ ■■■■■■■■■■■■ showing on the LCD (about for one second).?

  - No Is the AC cable connected properly?

    No Connect the AC cable correctly.

  - Yes Is +5V output to the panel connector (OPTN connector) on the engine board (71K PWB)?
    Pins 6, 7 and 14: +5V Pins 1, 3, 11 and 16: 0V

    Yes Is +5V output to the panel connector on the relay board (71 PWB)?
    Pin 5: +5V Pin 2: 0V

    No Replace the relay board.

    Yes Is the operator panel cable connected properly?

    No Connect the cable properly.

    Yes Replace the operator panel cable. Is the printer recovered from the error?

    No Replace the operator panel cover Assy.

    Yes End

  - No Is +5V output to the power connector of the engine board (71K PWB)?
    Pins 11, 12, 13 and 14: +5V Pins 3, 4, 5, 6, 25, 26, 27 and 28: 0V

    No Replace the low voltage power unit after checking the power connector for connection.

  - Yes Replace the engine board.

- Yes Are the following voltages output to the PU IF connector of the main board?
  Pins 137 to 147, 187 to 197: 5V Pins 125 to 136, 175 to 186: +3.3V
  Pins 148 and 198: +12V Pins 101 to 124, 149 to 174, 199 and 200: 0V

  Yes Replace the main board.

- No Are the following voltages output to the power connector of the engine board?
  Pins 11, 12, 13 and 14:5V Pins 15, 15, 17 and 18: +3.3V Pin 1: +12V
  Pins 7, 8, 9 and 10: +32V Pins 3, 4, 5,6, 25, 26, 27 and 28: 0V

  Yes Replace the engine board.

- No Replace the low voltage power supply.

②-1 Paper Loading Jam (1st Tray)

- Has the paper loading jam occurred immediately after power-on?
  - Yes Is the paper jammed at the entrance cassette sensor or the entrance MT sensor?
    - Yes Remove the jammed paper.

    Ⓐ
  - No Does the sensor lever (entrance cassette sensor, entrance MT sensor) move properly?
    - No Replace the defective sensor lever.
  - Yes Does the sensor (entrance cassette sensor, entrance MT sensor) operate properly? (Operate each sensor lever to check signals on the FSENS connector pin of the engine board (71K PWB).)
    Pin 4: Entrance cassette sensor, Pin 2: Entrance MT sensor
    - No Replace the sensor board (R71 PWB) after checking the signal cable connection.
  - Yes Check the signal cable connection or replace the engine board.
- No Has the paper loading jam occurred immediately after the paper drawing into the tray?
  - Yes Has the paper reached the entrance cassette sensor or the entrance MT sensor?
    - Yes Go to Ⓐ.
  - No Replace the feed roller or the paper separation frame Assy of the paper cassette.
- No Is the main feed motor running?
  - Yes Replace the feed roller or the paper separation frame Assy of the paper cassette.
- No Does the resistance of the main motor lie at the rated value (approx. 4Ω)?
  - No Replace the main feed motor.
- Yes Is 32V output to the fuses FU2 and FU3 of the engine board?
  - No Replace the low voltage power unit.
- Yes Replace the engine board after checking the gear engagement and cable connection.

②-2 Paper Loading Jam (Multipurpose Tray)

- Has the paper loading jam occurred immediately after power-on?
  - Yes: Is the paper jammed at the entrance cassette sensor or the entrance MT sensor?
    - Yes: Remove the jammed paper.
  - No Ⓐ: Does the entrance MT sensor lever move properly?
    - No: Replace the defective sensor lever.
  - Yes: Does the entrance MT sensor operate properly?
    (Operate each sensor lever to check that the sensor operates correctly on the switch scan test in the system maintenance mode or check the signals on the FSENS connector pin of the engine board (71K PWB).)
    Pin 2: Entrance MT sensor
    - No: Replace the sensor board (R71 PWB) after checking the signal cable connection.
  - Yes: Replace the engine board after checking the signal cable connection.
- No: Has the paper loading jam occurred immediately after the paper drawing into the tray?
  - Yes: Has the paper reached the entrance MT sensor?
    - Yes: Go to Ⓐ.
  - No: Replace the multipurpose tray Assy.
- No: Is the registration motor running?
  - No: Is 32V output to the fuse FU3 of the engine board?
    - No: Replace the low voltage unit.
  - Yes: Replace the engine board after checking the cable connection.
- Yes: Replace the engine board after checking the cable connection.

②-3 Paper feed jam

- Has the paper feed jam occurred immediately after power-on?
  - Yes: Is the paper jammed at the entrance belt sensor?
    - Yes: Remove the jammed paper.
    - Ⓐ
  - No: Does the write sensor lever move properly?
    - No: Replace the write sensor lever.
  - Yes: Does the entrance belt sensor operate properly?
    (Operate the sensor lever to check the signals on the FSENS connector pin of the engine board (71K PWB).)
    Pin 6: Entrance belt sensor
    - No: Replace the sensor board (R71 PWB) after checking the cable connection.
  - Yes: Check the signal cable for connection. Is it connected properly?
    - No: Connect the cable properly.
  - Yes: Replace the engine board.
- No: Has the paper feed jam occurred immediately after the paper drawing into the tray?
  - Yes: Has the paper reached the write sensor?
    - Yes: Go to Ⓐ.
  - No: Is the registration motor running?
    - No: Does the registration of the registration motor lie at the rated value (approx. 7.9Ω)?
      - No: Replace the registration motor.
    - Yes: Replace the engine board after checking the gear engagement.
  - Yes: Replace the registration roller A or B.
- No: Has the paper jam occurred during the paper loading?
  - Yes: Is the belt motor running?
    - No: Does the registration of the belt motor lie at the rated value (approx. 7.9Ω)?
      - No: Replace the belt motor.
    - Yes: Replace the engine board after checking the gear engagement.
  - Yes: Replace the belt cassette Assy after checking the gear engagement.
- No: End

②-4 Paper Exit Jam

- Has the paper exit jam occurred immediately after power-on?
  - Yes: Is the paper jammed at the exit sensor?
    - Yes: Remove the jammed paper.
  - No: Does the sensor lever move properly?
    - No: Replace the sensor lever.
  - Yes: Does the exit sensor operate properly?
    (Operate the sensor lever to check the sensor for proper operation on the switch scan test in the system maintenance mode or check the signals on the connector PARTTEMP pin 8 of the engine board (71K PWB).
    - No: Replace the exit sensor after checking the signal cable connection.
  - Yes: Replace the engine board.
- No: Is the face-up stacker cover open or close completely?
  - No: Open or close the stacker cover completely.
- Yes: Is the heat motor running?
  - No: Does the resistance of the heat motor lie at the rated value (approx. 7.9Ω)?
    - No: Replace the heat motor.
  - Yes: Is 32V output to the POWER connector Pins 7~10 on the engine board?
    - No: Replace the low voltage power unit.
  - Yes: Replace the engine board after checking the cable connection.
- Yes: Does the exit guide Assy operate properly?
  - No: Replace the exit guide Assy.
- Yes: Replace the engine board.

②-5 Duplex Jam

- Has the paper feed jam occurred immediately after power-on?
  - Yes: Does the paper exist in the duplex unit?
    - Yes: Remove the jammad paper.
    - Ⓐ
  - No: Do the levers of the duplex-in, rear and front sensors move properly?
    - No: Replace the defective sensor lever.
  - Yes: Do the duplex-in, rear and front sensors move properly?
    (Check that each sensor's level is at the one measured under the paperless condition through the switch scan test in the system maintenance mode).
    - No: Replace the defective sensor after checking the cable connection.
  - Yes: Check the signal cable connection. Is it connected properly?
    - No: Connect the cable properly.
  - Yes: Replace the duplex controller board (V71 PWB).
- No: Has the paper jam occurred immediately after the paper drawing into the unit?
  - Yes: Has the paper reached the duplex rear sensor?
    - Yes: Go to Ⓐ.
  - No: Is the duplex motor running?
    - No: Does the resistance of the heat motor lie at the rated value (approx. 6.7Ω)?
      - No: Replace the duplex motor.
      - Yes: Replace the duplex board (V71 PWB) after checking the gear engagement.
  - Yes: Replace the registration roller A or B.
- No: Replace the duplex unit.

③ Paper Size Error

Has the proper size paper used?

No Use the proper size paper.

Yes Has the jam occurred at the entrance FF sensor or the paper width sensor?

Yes Remove the jammed paper.

Yes Does the entrance FF sensor lever move properly?

No Replace the defective sensor lever.

Yes Does the entrance FF sensor operate properly?
(Move the sensor lever to check the signals on the FSENS connector pin of the engine board 71K PWB.)
Pin 4: Entrance FF sensor

No Replace the sensor board (R71 PWB) after checking the cable connection.

Yes Does the entrance belt sensor lever move properly?

No Replace the defective sensor lever.

Yes Does the entrance belt sensor operate properly?
(Move the sensor lever to check the sensor for proper operation through the switch scan test in the system maintenance mode. Also check the signals on the FSENS connector pin of the engine board 71K PWB.)
Pin 6: Entrance FF sensor

No Replace the sensor board (R71 PWB) after checking the cable connection.

Yes Do the paper size sensing switches on the paper size sensing board (PXC-PWB) all operate\ properly?
(Press the paper size sensing switches to check the signals on the PSIZE connector pin of the engine board.)
Pin 3: Paper size sensor 1
Pin 4: Paper size sensor 2
Pin 5: Paper size sensor 3
Pin 6: Paper size sensor 4

No Replace the paper size sensing board (PXC PWB) after checking the cable connection.

Yes Reeplace the engine board after checking the cable connection.

④ Image Drum Unit (ID) Up-and-Down Operation Error

- Turn the printer off and, after a few seconds, on again.

- Are all the ID drums revolving properly during printing?

  - No Does the resistance of the ID motor lie at the rated value (approx. 4.0Ω)?

    No Replace the defective IDU motor.

  - Yes Is 32V output to F3 and F5 of the engine board?

    No Replace the low voltage power unit.

  - Yes Replace the engine board after checking the cable connection.

- Yes Do the IDU sensor terminals operate properly?

  - No Replace the defective gear or sensor terminals after checking the gear engagement and the sensor terminal operation.

- Yes Does the ID sensor lever move properly?
  (Check the signals on the JODEN connector pin of the driver board (71K PWB).)
  Pin 12: IDU sensor Yellow
  Pin 2: IDU sensor Magenta
  Pin 4: IDU sensor Cyan
  Pin 14: IDU sensor Black
  Do all lie at 5V level or 0V level?

  No Replace the connection board (N71 PWB).

- Yes Replace the engine board after checking the cable connection between connection board (N71 PWB) and the engine board (71K PWB).

⑤ Fusing Unit Error

- Has the fuser error occurred immediately after power-on?

Ⓐ

- Yes Is the heat roller thermistor broken or short-circuited? (See Figure 5-1.)
  (approx. 190k to 980kΩ at room temperatures of 0 to 43˚C)
  - Yes Replace the fuser unit.
- No Is the backup roller thermistor broken or short-circuited? (See Figure 5-1.)
  (Approx. 190k to 980kΩ at room temperatures of 0 to 43˚C)
  - Yes Replace the fuser unit.
- No

No Has the fuser unit error occurred three minutes after power-on?

- No Go to Ⓐ.

Is the heater of the fuser unit on (Is it hot)?

- Yes Replace the engine board.
- No Replace the fuser unit.

No Is AC voltage output between the CN1 connector pin1 and pin3 of the low voltage power unit.

No Replace the low voltage power unit.

Yes Replace the fuser unit.

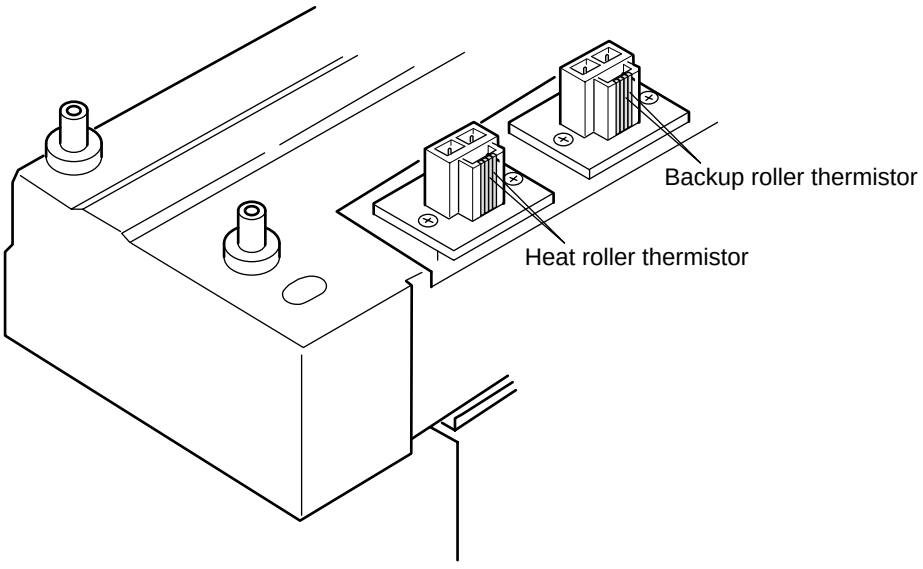


Figure 5-1

⑥ Motor Fan Error

- Does the low voltage power supply fan run after power-on?
  - No — Is 32V output to the fuse FU502 of the engine board (71K PWB)?
    - No — Is 32V output to the power connector of the engine board (71K PWB)?
      32V: Pins 7, 8, 9 and 10
      - No — Replace the low voltage power unit after checking the cable connection.
    - Yes — Replace the engine board.
  - Yes — Has the low voltage power supply fan replaced?
    - Yes — End
  - No — Replace the low voltage power supply fan.
- Yes — Does the engine board fan rotate after power-on?
  - No — Is 32V output to the fuse FU502 of the engine board (71K PWB)?
    - No — Is 32V output to the power connector of the engine board (71K PWB)?
      32V: Pins 7, 8, 9 and 10
      - No — Replace the low voltage power after checking the cable connection.
    - Yes — Replace the engine board.
  - Yes — Replace the fan of the engine board.
- Yes — End

### 5.5.3 Troubleshooting image problems

Following is the troubleshooting for image problems illustrated below:

| Image problem | Flowchart No. |
|---|---|
| Light or faded image on whole page, or color misalignment on whole page (Figure 5-2 Ⓐ) | ① |
| Dirty background (Figure 5-2 Ⓑ) | ② |
| Blank page (Figure 5-2 Ⓒ) | ③ |
| Vertical belt or line (black or color belt, or black or color line) (Figure 5-2 Ⓓ) | ④ |
| Vertical white belt or line, or uneven-color belt or line (Figure 5-2 Ⓕ) | ⑤ |
| Poor fusing (ink spreads or peels when touched with fingers.) | ⑥ |
| Defective image of regular interval (Figure 5-2 Ⓔ) | ⑦ |
| Missing image | ⑧ |
| Color misalignment | ⑨ |
| Color different from original one | ⑩ |

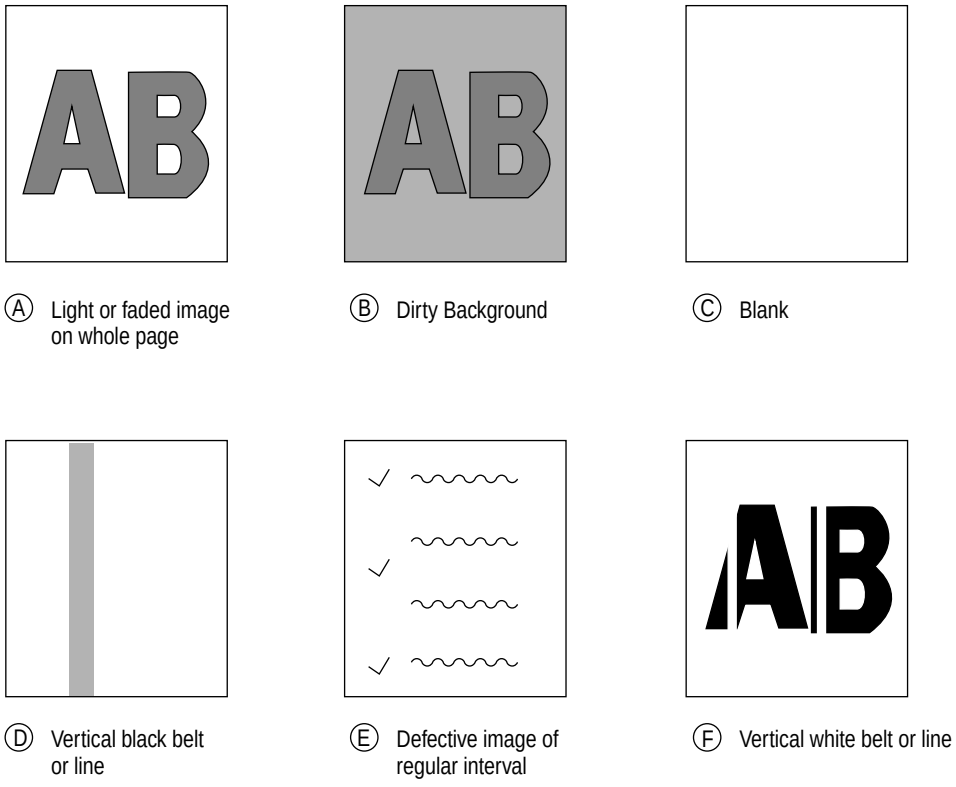


Figure 5-2

① Light or Faded Image on Whole Page, or Color Misalignment on Whole Page (Figure 5-2 Ⓐ)

Are toners running short (is toner low displayed)?

Yes Supply toner(s).

No Is proper paper used?

No Use proper paper.

Yes Are the LED head lenses dirty?

Yes Clean the dirty lens(es).

No Are all the LED head Assys connected to the junction board (Y71 PWB) and the engine board (71K PWB) properly?

No Connect the cable between the LED head(s) and the engine board properly, checking the cable connection.

Yes Is +3.8V output to the following power connector pins of the junction board (Y71 PWB)?
+3.8V: Pins 1 to 8

Yes Is +3.8V output to the LED head Assys from the junction board (Y71 PWB)?
YPOW connector pin 3: LED head Assy Yellow
MPOW connector pin 3: LED head Assy Magenta
CPOW connector pin 3: LED head Assy Cyan
KPOW connector pin 3: LED head Assy Black

No Replace the junction board (Y71 PWB).

Yes Replace the LED head Assy(s) after checking the cable connection.

No Replace the low voltage power unit after checking the cable connection.
Has the problem been corrected?

Yes End

No Is 32V output to the power connector of the engine board (71K PWB)?
+32V: Pins 7 to 10.

No Replace the low voltage power unit after checking the cable connection.

Yes Is 32V output to the HVOL T connector pin 5 of the engine board (71K PWB)?

No Replace the engine board.

Yes Replace the high voltage unit or the belt cassette Assy after checking the cable connection.
Has the problem been corrected?

Yes End

No Are the terminals of the ID units connected to the contact Assy properly? (See Figure 5-2.)

No Connect the ID unit terminal(s) to the contact Assy properly.

Yes Replace the image drum unit(s).

***Notes:*** 1. When replacing the engine board (71K PWB), demount the EEPROM from the board and mount it on a new board.
2. When the EEPROM is not replaced, see Section 3.2.2.

② Dirty Background (Figure 5-2 Ⓑ)

Were the image drums exposed to external light for a long time?

Yes Replace the ID unit(s).

No Is the roller of the fuser unit dirty?

Yes Replace the fuser unit.

No Correct the PAPER TYPE setting.
Light: 60 g/m$^2$ Medium Light: 67.5 g/m$^2$ Medium: 75 g/m$^2$
Medium Heavy: 90g/m$^2$ Heavy: 105 g/m$^2$ Ultra Heavy: 120 g/m$^2$ Transparency

No Set the MEDIA TYPE correctly.

No Are the LED head Assys connected to the junction board (Y71 PWB) properly?

No Connect the LED head Assy(s) to the junction board (Y71 PWB) properly.

Yes Is +3.8V output to the following power connector pins of the junction board (Y71 PWB)?
+38V: Pins 1 to 8

Yes Is +3.8V output to the following cable connector pins between the junction board (Y71 PWB) and the LED head Assys?
YPOW connector pin 3: LED head Assy Yellow
MPOW connector pin 3: LED head Assy Magenta
CPOW connector pin 3: LED head Assy Cyan
KPOW connector pin 3: LED head Assy Black

No Replace the junction board (Y71 PWB).

Yes Replace the LED head Assy after checking the cable connection.

No Replace the low voltage power unit after checking the cable connection.
Has the problem been corrected?

Yes End

No Is 32V supplied to the power connector of the engine board (71K PWB)?
+32V: Pins 7 to 10

No Replace the low voltage power unit after checking the cable connection.

Yes Is 32V supplied to the power connector pin of the engine board (71K PWB)?

No Replace the engine board.

Yes Replace the high voltage power unit or the belt cassette Assy after checking the cable connection. Has the problem been corrected?

Yes End

No Are the terminals of the ID units connected to the contact Assy properly? (See Figure 5-2.)

No Connect the ID unit terminal(s) to the contact Assy properly.

Yes Replace the image drum unit(s).

***Notes:*** 1. When replacing the engine board (71K PWB), demount the EEPROM from the board and mount it on a new board.
2. When the EEPROM is not replaced, see Section 3.2.2.

③ Blank Page (Figure 5-2 Ⓒ)

Are the LED head Assys connected to the junction board (Y71 PWB) and the engine board (71K PWB) properly?

No Connect the LED Assy(s) to the junction board (Y71 PWB) and the engine board (71K PWB) properly, checking the cable connection.

Yes Is +3.8V output to the following power connector pins of the junction board (Y71K PWB)?
+3.8V: Pins 1 to 8

Yes Is +3.8V output to the following cable connector pins between the junction board (Y71 PWB) and the LED heads?
YPOW connector pin 3: LED head Assy Yellow
MPOW connector pin 3: LED head Assy Magenta
CPOW connector pin 3: LED hdad Assy Cyan
KPOW connector pin 3: LED head Assy Black

No Replace the junction board (Y71 PWB).

Yes Replace the LED head Assy(s) after checking the cable connection.

No Is 32V output to the power connector of the engine board (71K PWB)? +3.8V: Pins 7 to 10

No Replace the low voltage power unit after checking the cable connection.

Yes Is 32V output to the HVOLT connector pin 5 of the engine board (71K PWB)?

No Replace the engine board.

Yes Replace the high voltage power unit or the belt cassette Assy after checking the cable connection. Has the problem been corrected?

Yes End

No Are the ID terminals connected to the contact Assy properly? (See Figure 5-2.)

No Connect the I/D terminal(s) to the contact Assy properly.

Yes Replace the I/D drum unit(s).

***Notes:*** 1. When replacing the engine board (71K PWB), demount the EEPROM from the board and mount it on a new board.
2. When the EEPROM is not replaced, see Section 3.2.2.

④ Vertical Belt or Line (Black or Color Belt, or Black or Color Line) (Figure 5-2 Ⓓ)

Are the LED head Assys connected to the junction board (Y71 PWB) properly?

No — Connect the LED head Assy(s) to the junction board properly.

Yes — Replace the LED head Assy(s) after checking the cable connection.
Has the problem been corrected?

Yes — End

No — Replace the junction board (Y71 PWB) after checking the cable connection.
Has the problem been corrected?

Yes — End

No — Is the engine board (71K PWB) connected to the junction board (Y71 PWB) properly?

No — Connect the engine board to the junction board properly.

Yes — Replace the engine board (71K PWB) after checking the cable connection.
Has the problem been corrected?

Yes — End

No — Are the I/D terminals connected to the contact Assy properly? (See Figure 5-3.)

No — Connect the I/D terminal(s) to the contact Assy properly.

Yes — Replace the I/D unit(s).

***Notes:*** 1. When replacing the engine board (71K PWB), demount the EEPROM from the board and mount it on a new board.
2. When the EEPROM is not replaced, see Section 3.2.2.

⑤ Vertical White Belt or Line, or Uneven-Color Belt or Line (Figure 5-2 Ⓕ)

Are the LED heads dirty?

Yes Clean the dirty LED head(s).

No Are the LED head Assys connected to the junction board (Y71 PWB) properly?

No Connect the LED head Assy(s) to the junction board (Y71 PWB) properly.

Yes Replace the LED head(s) after checking the cable connection.
Has the problem been corrected?

Yes End

No Replace the junction board (Y71 PWB) after checking the cable connection.
Has the problem been corrected?

Yes End

No Is the engine board (71K PWB) connected to the junction board properly?

No Connect the engine board to the junction board properly.

Yes Replace the engine board (71K PWB) after checking the cable connection.
Has the problem been corrected?

Yes End

No Are the I/D terminals connected to the contact Assy properly? (See Figure 5-3.)

No Connect the I/D terminal(s) to the contact Assy properly.

Yes Replace the I/D unit(s).

***Notes:*** 1. When replacing the engine board (71K PWB), demount the EEPROM from the board and mount it on a new board.
2. When the EEPROM is not replaced, see Section 3.2.2.

⑥ Poor Fusing (Ink spreads or peels when touched with fingers.)

Is proper paper used?

No Use proper paper.

Yes Is the contact of the fuser unit connected properly?

No Connect the contact of the fuser unit properly.

Yes Is the roller of the fuser unit dirty?

Yes Replace the fuser unit Assy.

No Is the MEDIA TYPE (menu 1) selected correctly?
Light: 60 g/$m^2$ Medium Light: 67.5 g/$m^2$ Medium: 75 g/$m^2$
Medium Heavy: 90g/$m^2$ Heavy: 105 g/$m^2$ Ultra Heavy: 120 g/$m^2$ Transparency

No Select the MEDIA TYPE correctly.

Yes Is AC voltage output between the CN connector pin1 and pin 3 of the low voltage power unit?

No Replace the low voltage power unit.

Yes Does the resistance of the heat roller thermistor lie at the rated voltage? (See Figure 5-1.) (Approx. 190k to 980kΩ at room temperatures of 0 to 43˚C)

No Replace the fuser unit.

Yes Does the resistance of the backup roller thermistor lie at the rated voltage? (See Figure 5-1.) (Approx. 190k to 980kΩ at room temperatures of 0 to 43˚C)

No Replace the fuser unit.

Yes Does the fuser temperature agree with the designated one?
Check the fuser temperature on the LCD in the engine maintenance mode.
Heat Roller (Upper): 145 to 155˚C (5FH to 6BH)
Backup Roller (Lower): 125 to 135˚C (48H to 53H)

No Replace the fuser unit Assy.

Yes Replace the fuser unit Assy.

***Notes:*** 1. When replacing the engine board (71K PWB), demount the EEPROM from the board and mount it on a new board.
2. When the EEPROM is not replaced, see Section 3.2.2.

⑦ Defective Image of Regular Interval (See Figure 5-2 Ⓔ)

| Interval | Problem | Troubleshooting |
|---|---|---|
| 94.2 mm | Image Drum | Replace the image drum unit. |
| 63.6 mm | Developing Roller | Replace the image drum unit. |
| 57.8 mm | Toner Supply Roller | Replace the image drum unit. |
| 44.0 mm | Charging Roller | Replace the image drum unit. |
| 113.1 mm | Fuser Upper Roller | Replace the fuser unit. |
| | Fuser Lower Roller | Replace the fuser unit. |
| 57.8 mm | Transfer Roller | Replace the bet cassette Assy. |

***Note!*** The life counters of the I/D units, fuser unit and belt cassette unit are automatically reset upon replacement of the units, respectively.

⑧ Missing Image

Are LED heads dirty?

Yes Clean the LED head(s).

No Are the LED head Assys connected to the junction board (Y71 PWB) properly?

No Connect the LED head Assy(s) to the board, checking the cable connection between the LED head(s) and the junction board.

Yes Is 3.8V output to the following HEADPOW connector pins of the junction board (Y71 PWB)?
+3.8V: Pins 1 to 8

Yes Is +3.3V output to the LED head Assys from the junction board (Y71 PWB)?
YPOW connector pin 3: LED head Assy Yellow
MPOW connector pin 3: LED head Assy Magenta
CPOW connector pin: LED head Assy Cyan
KPOW connector pin 3: LED head Assy Black

No Replace the junction board (Y71 PWB).

Yes Replace the LED head Assy(s) after checking the cable connection.

No Replace the low voltage power unit after checking the cable connection.
Has the problem been corrected?

Yes End

No Is 32V output to the power connector of the engine board (71K PWB)? +32V: Pins 7 to 10

No Replace the low voltage power unit after checking the cable connection.

Yes Is 32V output to the HVOLT connector pin 5 of the engine board (71K PWB)?

No Replace the engine board.

Yes Replace the high voltage power unit or the belt cassette Assy after checking the cable connection. Has the problem been corrected?

Yes End

No Are the I/D terminals connected to the contact Assy properly? (See Figure 5-3.)

No Connect the I/D terminal(s) to the contact Assy properly.

Yes Replace the I/D unit(s).

***Notes:*** 1. When replacing the engine board (71K PWB), demount the EEPROM from the board and mount it on a new board.
2. When the EEPROM is not replaced, see Section 3.2.2.

⑨ Color Misalignment

Is the color menu of the user menu mode "Automatic Color-Registration Adjustment" OFF?

Yes Make it on. Recovered?

Yes End

No "TONER LOW" is displayed.

Yes Replenish toner. Recovered?

Yes End

No Execute the color registration test in the engine maintenance mode.
Procedures: Enter the self-diagnostic mode (Level 1) of the engine maintenance mode.

| DIAGNOSTIC MODE |
|---|
| XX.XX.XX |

Press Keys (0) and (4) to enter the self-diagnostic mode (Level 2).

| ENGINE DIAG LEVEL2 |
|---|
| |

Press Key (1) three times to display "REG ADJUST TEST".

| REG ADJUST TEST |
|---|
| |

Press Key (2) once to display "REG ADJUST EXECUTE".

| REG ADJUST EXECUTE |
|---|
| |

Press Key (3) to execute automatic color-registration adjustment.
(The motor starts rotating to adjust color-registration.)

Color registration was not adjusted (that is, the motor did not rotate) and "OK" was displayed immediately.

Yes Some error other than color misalignment has occurred. After recovering from the error, has the color registration become normal?

Yes End

No "NG CALIBRATION LEFT/RIGHT" is displayed.

Yes Is the color-registration sensor cover stained?

Yes The sensor cover surface is not cleaned appropriately by the cleaning blade on the back of the shutter. Replace the shutter and sensor cover to ensure suitable cleaning performance.

(A)

(A)

No Verify connection between the connector on Z71-PWB (color-registration sensor board) and RSNS/POWER connectors on 71K-PWB (engine board).

Yes End

No Replace Z71-PWB. Recovered?

Yes End

No Replace the engine board. Recovered?

Yes End

No Replace the cable connecting Z71-PWB and the engine board. Recovered?

Yes End

No "DYNAMICRANGE LEFT/RIGHT" is displayed.

Yes Is the color-registration sensor cover stained?

Yes The sensor cover surface is not cleaned appropriately by the cleaning blade on the back of the shutter. Replace the shutter and sensor cover to ensure suitable cleaning performance.

No Does the shutter open/close appropriately?

Yes Replace the shutter. Recovered?

Yes End

No Replace the shutter open/close solenoid. Recovered?

Yes End

No Replace the belt unit. Recovered?

Yes End

No Replace the ID unit. Recovered?

Yes End

No "Yellow/Magenta/Cyan Left/Right/Horizontal" is displayed.

Yes Replace the belt unit. Recovered?

Yes End

No Replace the ID unit. Recovered?

Yes End

(B)

(B)

Are there problems in the gears (the gear Assys of the I/Ds, multipurpose tray, belt unit or belt motor)?

Yes Replace the damaged gear Assy(s).

No Connect the LED head unit(s) to the junction board properly.

No Connect the boards correctly.

Yes Replace the LED head Assy(s) after checking the cable connection.
Has the problem been corrected?

Yes End

No Replace the junction board after checking the cable connection.
Has the problem been corrected?

Yes End

No Is the engine board (71K PWB) connected to the junction board (Y71 PWB) properly?

No Connect the engine board to the junction board properly.

Yes Replace the EEPROM on the engine board after checking the cable connection.
Has the problem been corrected?

Yes End

No Replace the engine board. Has the problem been corrected?

Yes End

No Are the I/D terminals connected to the contact Assy properly? (See Figure 5-3.)

No Connect the I/D terminal(s) to the contact Assy properly.

Yes Replace the I/D unit(s).

***Notes:*** 1. When replacing the engine board (71K PWB), demount the EEPROM from the board and mount it on a new board.
2. When the EEPROM is not replaced, see Section 3.2.2.

⑩ Color Different from Original One

Are the LED head lenses dirty?

Yes Clean the LED head lens(es).

No Are the LED head Assys connected to the junction board (Y71 PWB) properly?

No Connect the LED head Assy(s) to the junction board, checking the cable connection between them.

Yes Is +3.8V output to the following HEADPOW connector pins of the junction board (Y71 PWB)?
+3.8V: Pins 1 to 8

Yes Is +3.8V output to the LED heads from the junction board (Y71 PWB)?
YPOW connector pin 3: LED head Assy Yellow
MPOW connector pin 3: LED head Assy Magenta
CPOW connector pin 3: LED head Assy Cyan
KPOW connector pin 3: LED head Assy Black

No Replace the junction board (Y71 PWB).

Yes Replace the LED head Assy(s) after checking the cable connection.

No Replace the low voltage power unit after checking the cable connection.
Has the problem been corrected?

Yes End

No Is 32V output to the power connector of the engine board (71K PWB)?
+32V: Pins 7, 8, 9 and 10

No Replace the low voltage power unit after checking the cable connection.

Yes Is 32V output to the HVOLT connector pin 5 of the engine board (71K PWB)?

No Replace the engine board.

Yes Replace the high voltage power unit or the belt cassette Assy after checking the cable connection? Has the problem been corrected?

Yes End

No Are I/D terminals connected to the contact Assy properly? (See Figure 5-3.)

No Connect the I/D terminal(s) to the contact Assy properly.

Yes Replace the I/D unit(s).

***Notes:*** 1. When replacing the engine board (71K PWB), demount the EEPROM from the board and mount it on a new board.
2. When the EEPROM is not replaced, see Section 3.2.2.

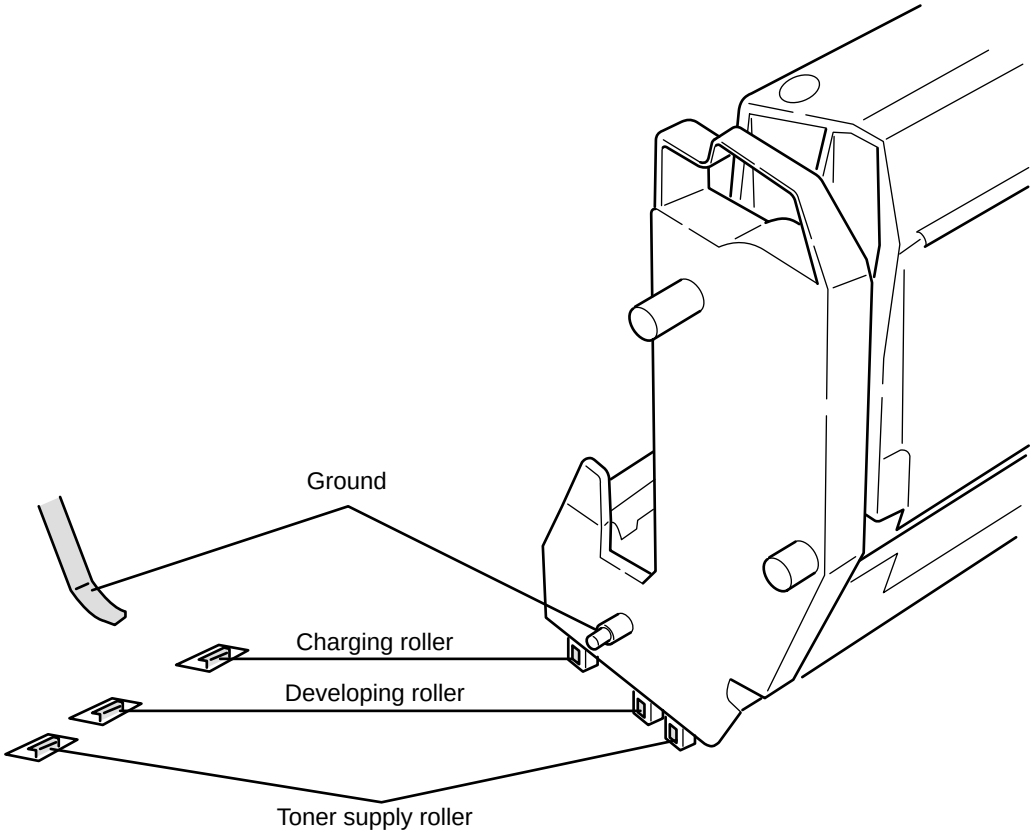
Ground
Charging roller
Developing roller
Toner supply roller

Figure 5-3

# 6. CONNECTION DIAGRAM

## 6.1 Resistance Checks

| Unit | Circuit Diagram | Illustration | Resistance |
|---|---|---|---|
| Transport Belt Motor | 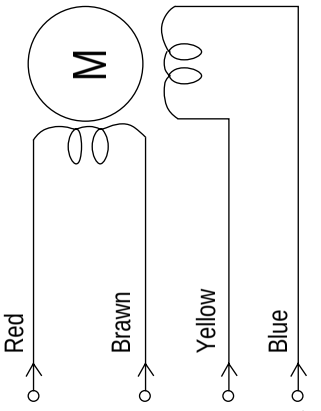 | 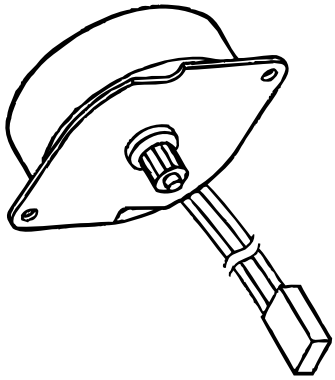 | Between pins 1 and 2: 7.9Ω<br>Between pins 3 and 4: 7.9Ω |
| Main Motor (Y) | 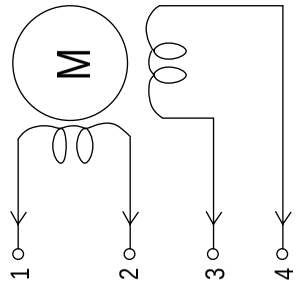 | 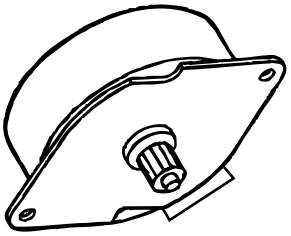 | Between pins 1 and 2: 4Ω<br>Between pins 3 and 4: 4Ω |
| Main Motor (M) | 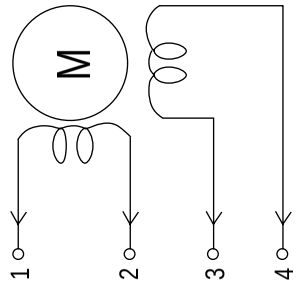 | 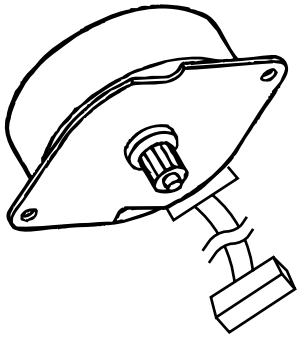 | Between pins 1 and 2: 4Ω<br>Between pins 3 and 4: 4Ω |

| Unit | Circuit Diagram | Illustration | Resistance |
|---|---|---|---|
| Main Motor (C) | 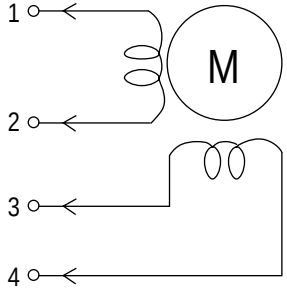 | 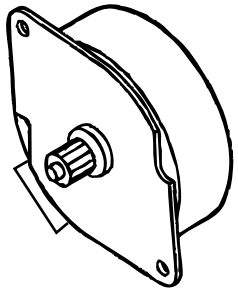 | Between pins 1 and 2: 4Ω<br>Between pins 3 and 4: 4Ω |
| Main Motor (K) | 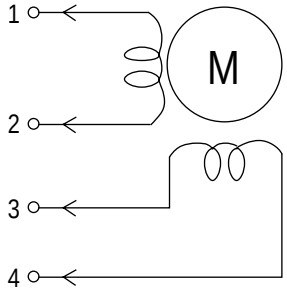 | 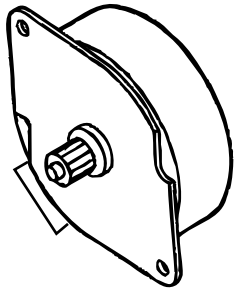 | Between pins 1 and 2: 4Ω<br>Between pins 3 and 4: 4Ω |
| Registration Motor | 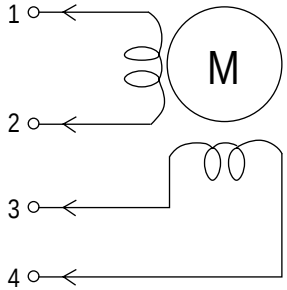 | 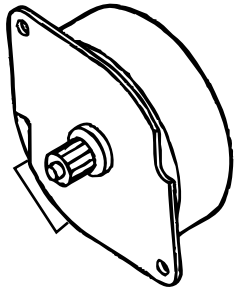 | Between pins 1 and 2: 7.9Ω<br>Between pins 3 and 4: 7.9Ω |



Oki Data CONFIDENTIAL

| Unit | Circuit Diagram | Illustration | Resistance |
|---|---|---|---|
| Fuser Motor | 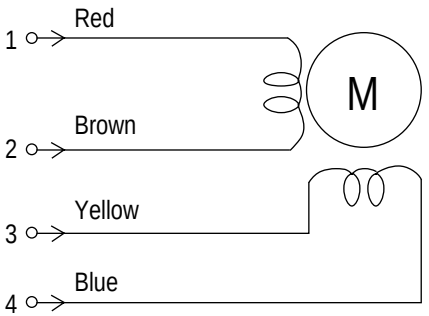 | 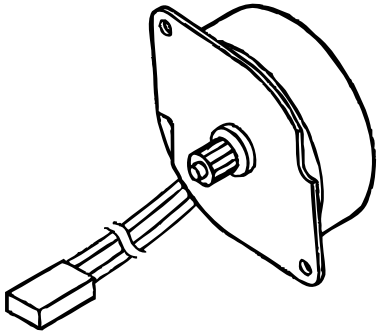 | Between pins 1 and 2: 7.9Ω<br>Between pins 3 and 4: 7.9Ω |
| Feeder Motor | 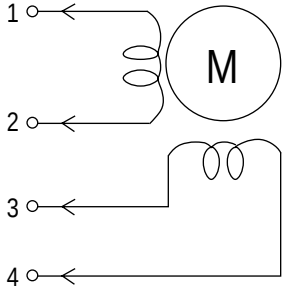 | 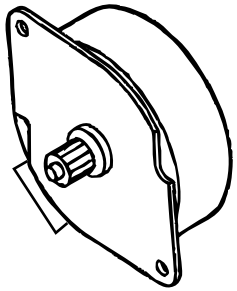 | Between pins 1 and 2: 7.9Ω<br>Between pins 3 and 4: 7.9Ω |
| Duplex Motor | 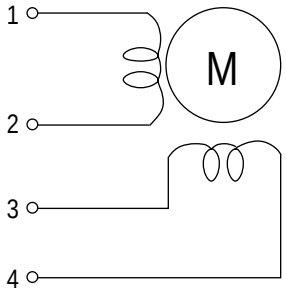 | 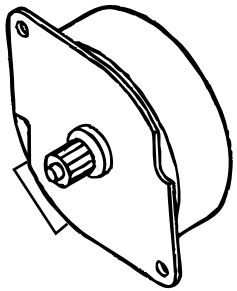 | Between pins 1 and 2: 6.7Ω<br>Between pins 3 and 4: 6.7Ω |



Oki Data CONFIDENTIAL

| Unit | Circuit Diagram | Illustration | Resistance |
|---|---|---|---|
| Main Cooling Fan Low Voltage Power Unit | 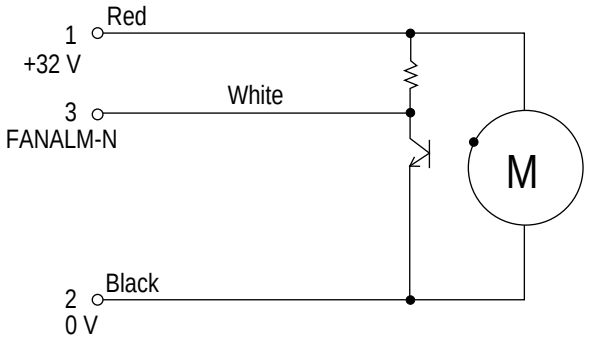 | 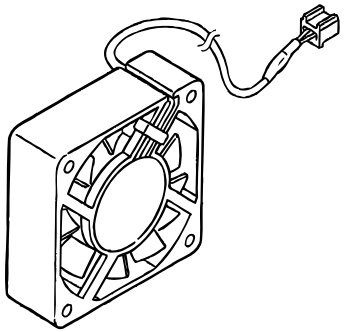 | |
| Electrical Chassis Cooling Fan | 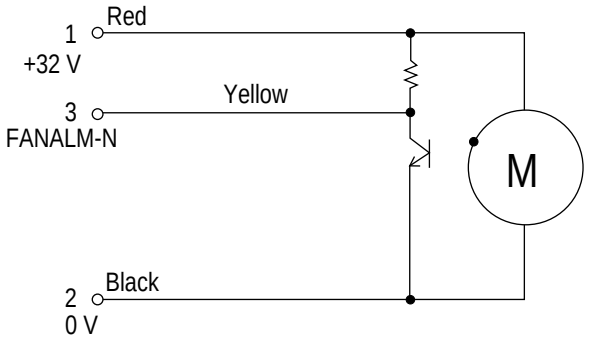 | 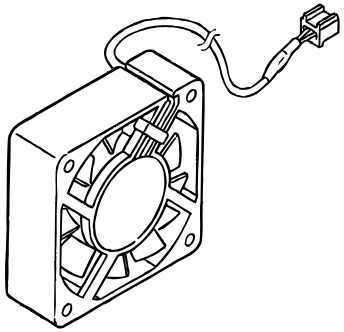 | |
| Fuser Unit | 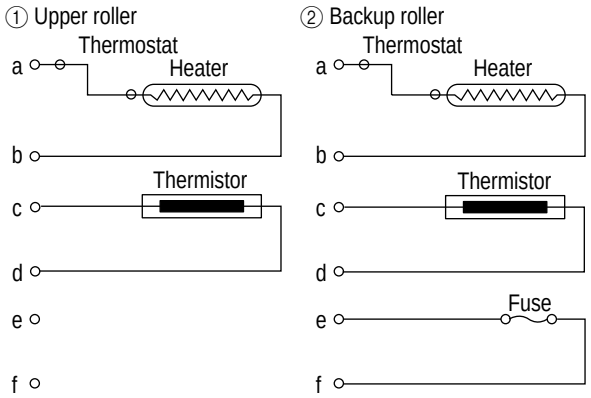 | 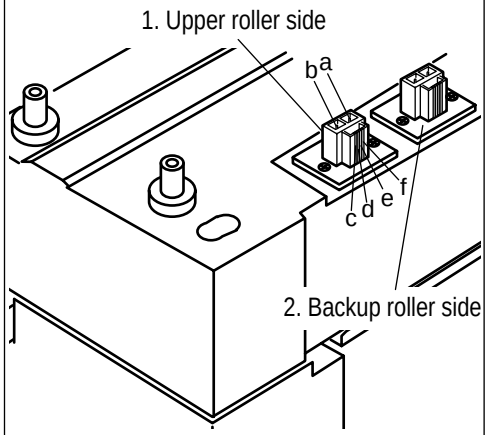 | 1. Upper Roller Side<br>Between pins “a” and “b”:<br>Between pins “c” and “d”: Open<br>Between pins “e” and “f”: 363kΩ (at 25˚C)<br><br>2. Backup Roller Side<br>Between pins “a” and “b”:<br>Between pins “c” and “d”: 0Ω or open<br>Between pins “e” and “f”: 363kΩ (at 25˚C) |



Oki Data CONFIDENTIAL

## 6.2 Program/Font ROM Layouts

(1) Print Engine Controller PWB (71K-PWB)

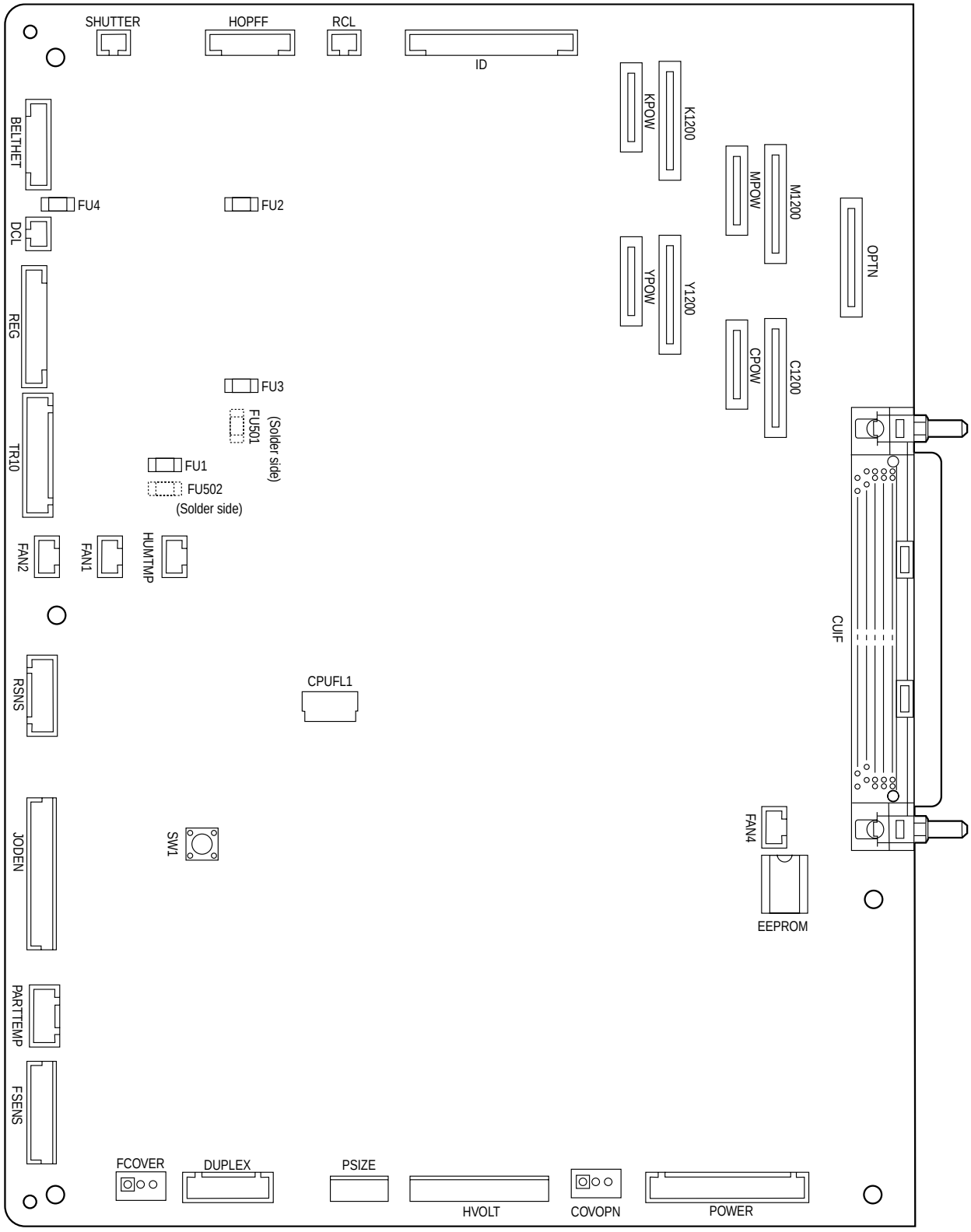

(2) Main Controller PWB

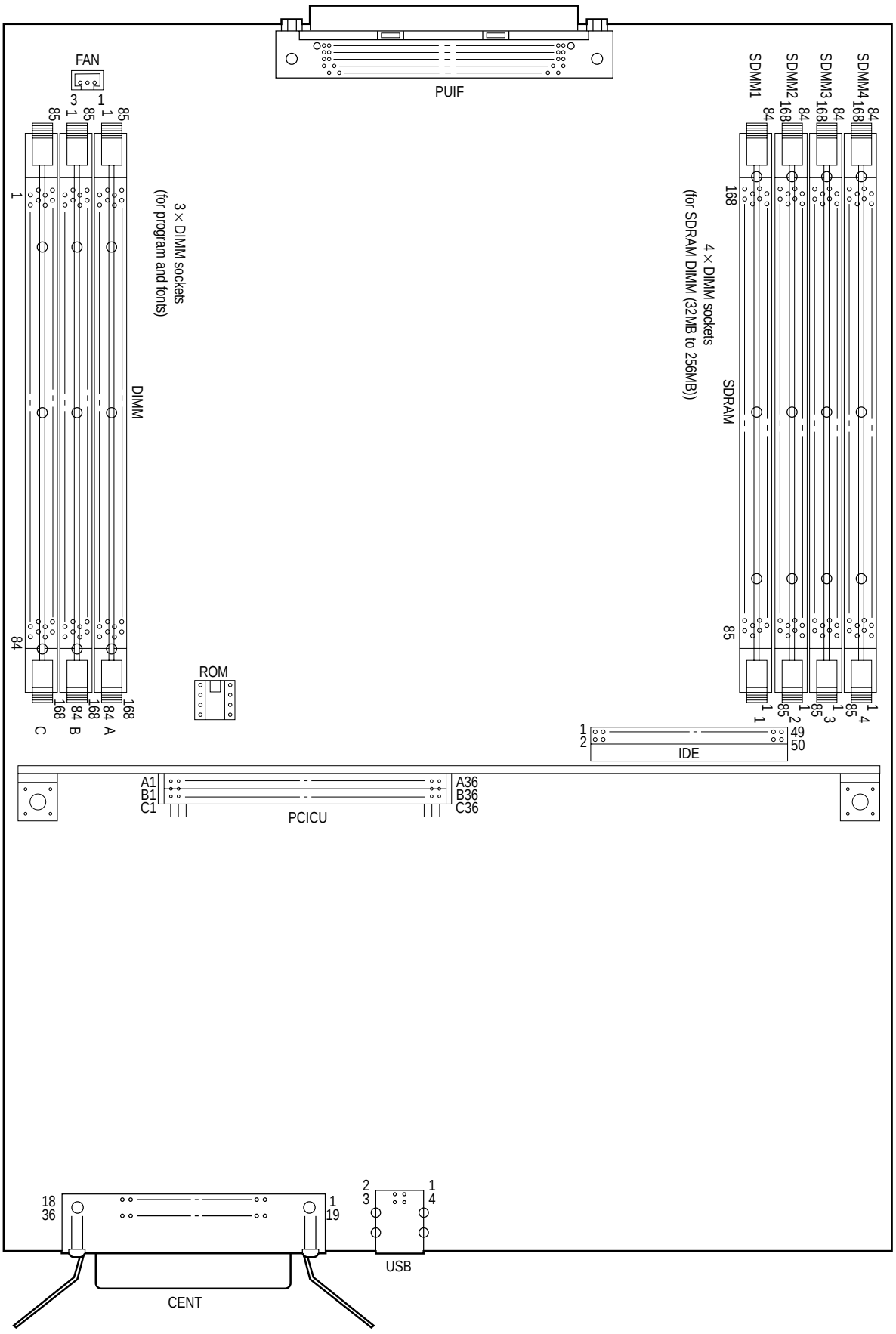


***Note!*** The option SDRAM DIMMs must be inserted in descending order of the parenthesized type No. appeared on the label of each DIMM into the slots 1, 3, 2 and 4 (see the user documentation for details).

(3) LED Control PWB (Y71-PWB)

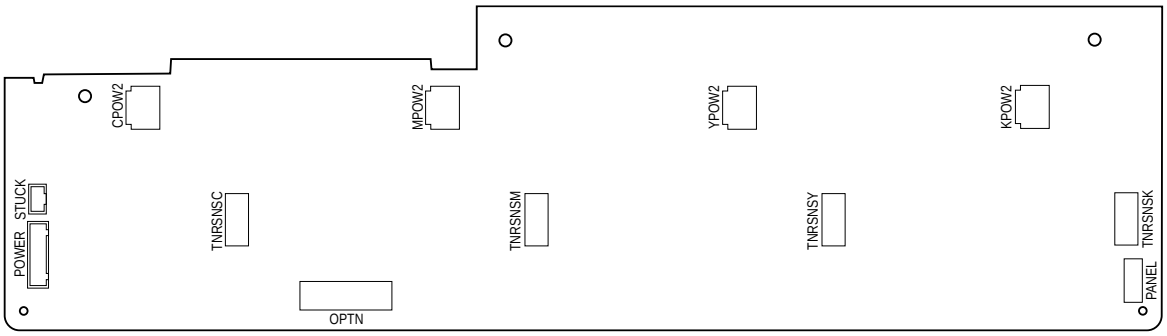


(4) Duplex Control PWB (V71-PWB)

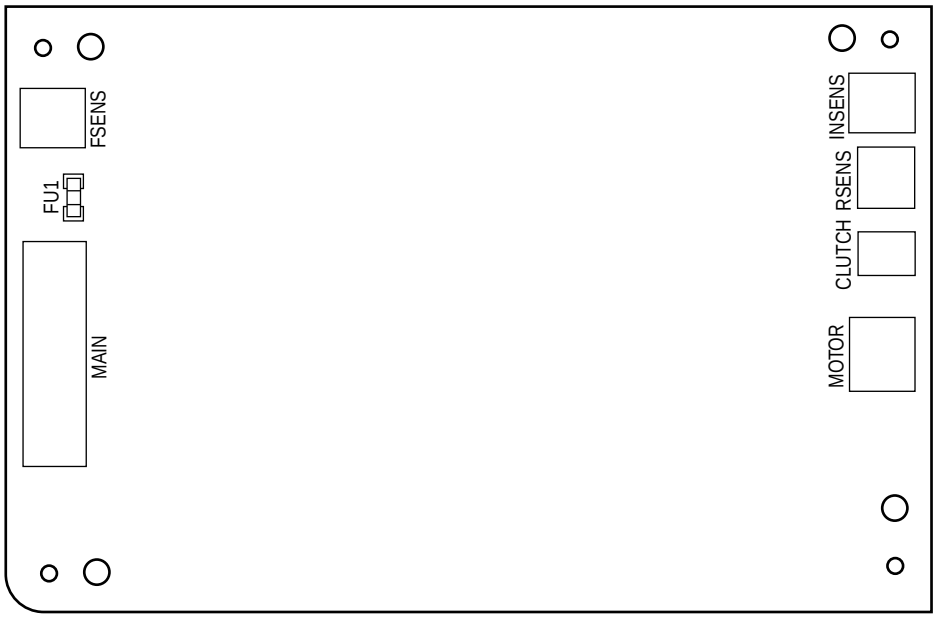


(5) Control Panel PWB (X71-PWB)

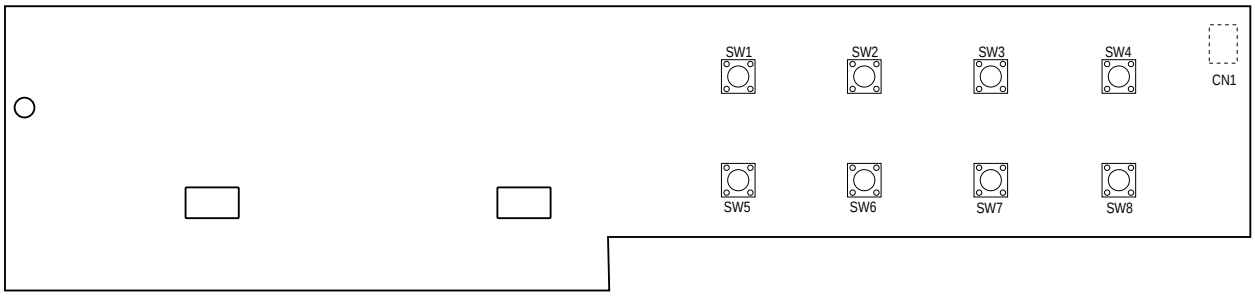

(6) N71-PWB

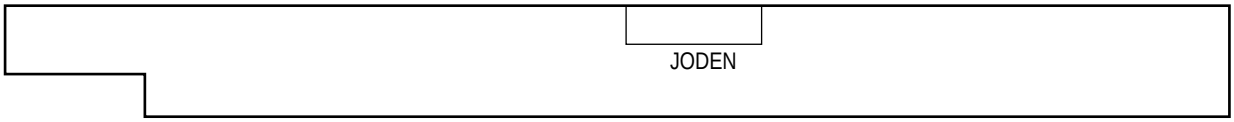


(7) Entrance Sensor PWB (R71-PWB)

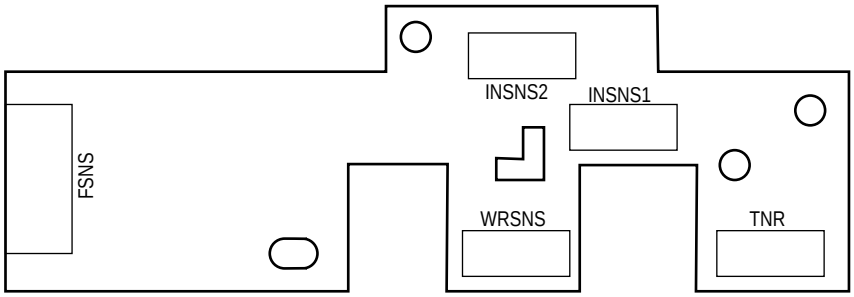


(8) Paper Size Sensing PWB (PXC-PWB)

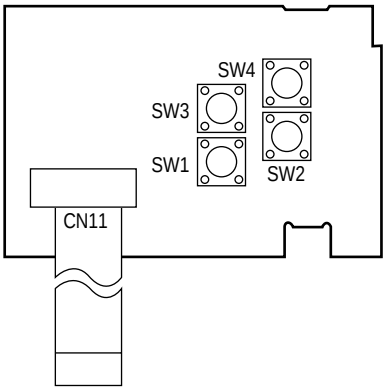

## 7. PARTS LIST

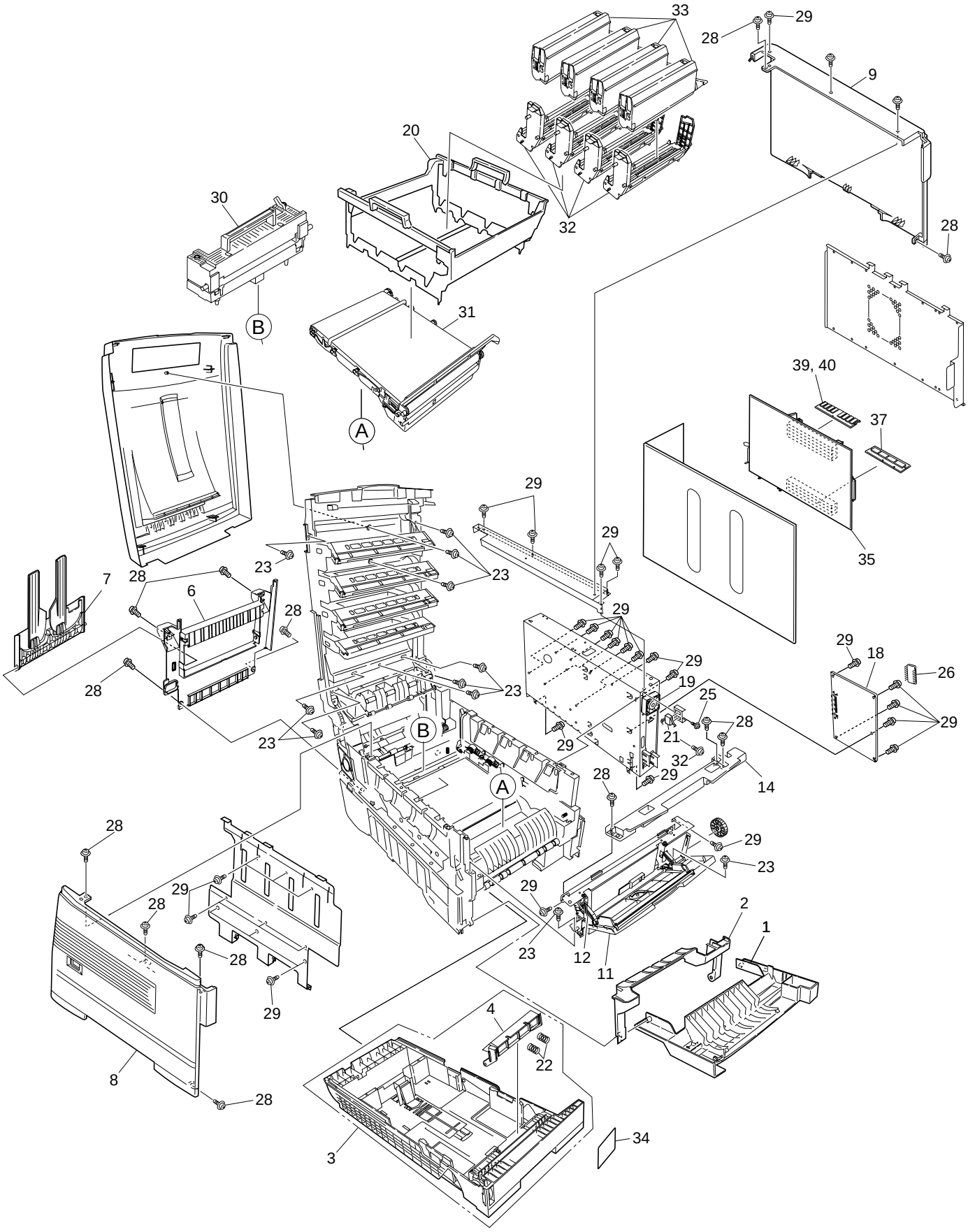


Figure 7-1-1/3

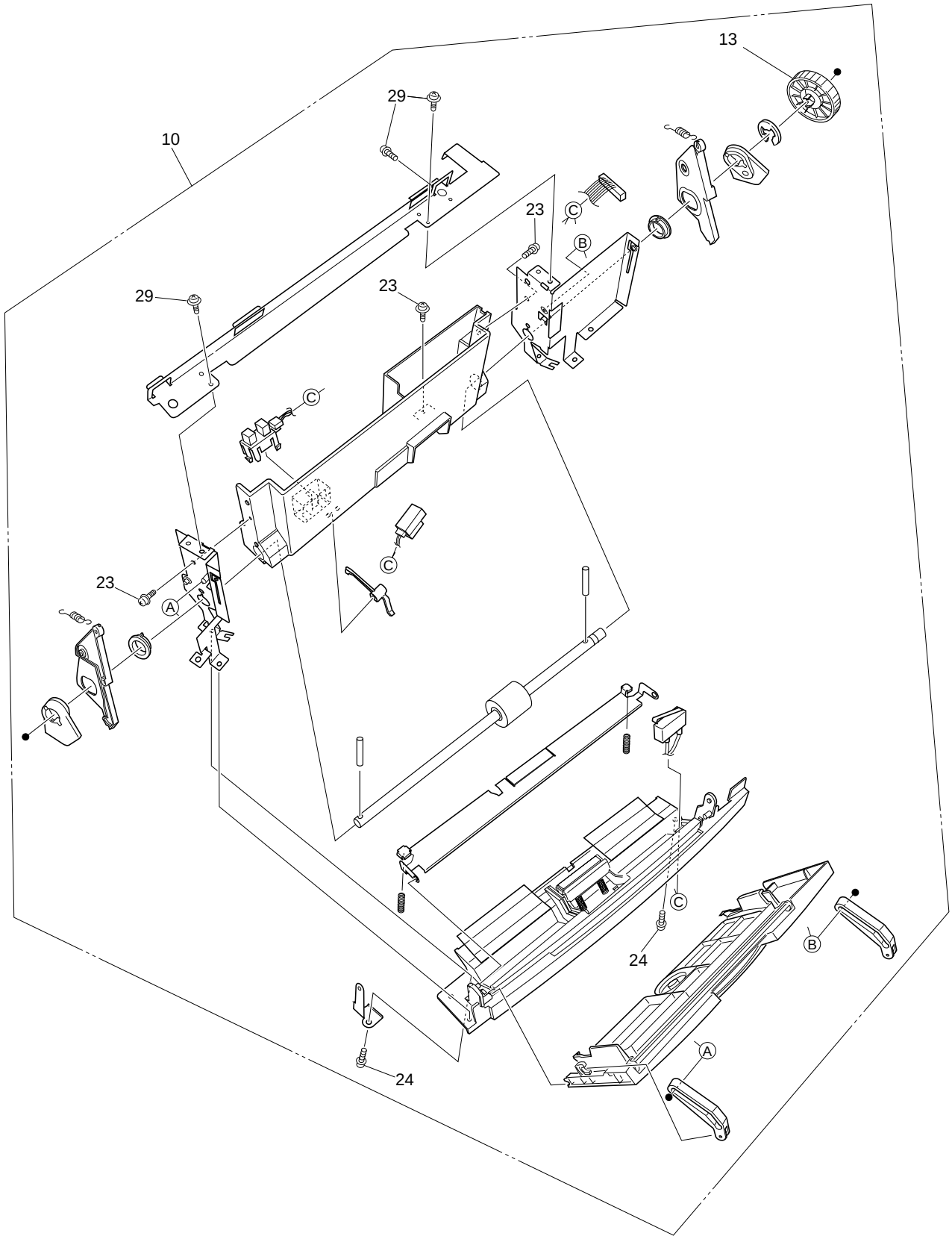


Figure 7-1-2/3

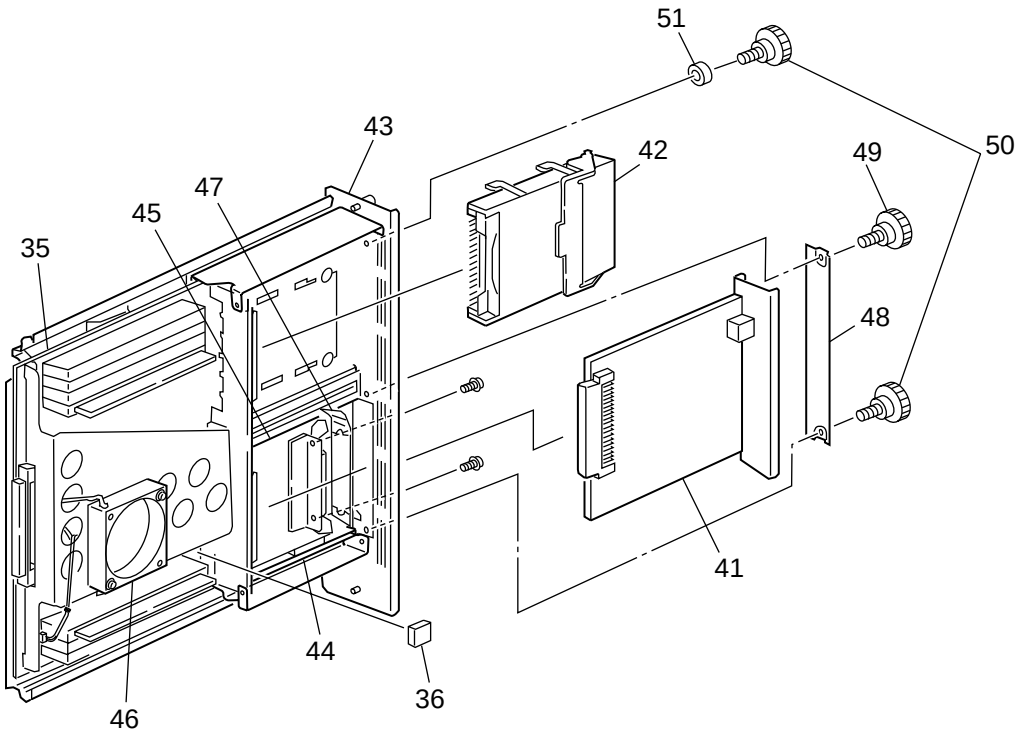


Board Assy.-cu 43 (Maintenance) [41848502] consists of a set of a bracket to support Motor Fan 46 (41410201), a sheet metal to secure PCB Assy-SWA 35 (41716809), a gasket bonded to that sheet metal, and screws (attached to the assembly).

The member 35 (PCB Assy-SWA [41716809]), which must be replaced together with the metal and its grouped parts in 43, is given a set of part Nos., i.e. the No. of the discrete PCB and the No. of the metal.

Figure 7-1-3/3

Table 7-1-1/3

# Main Assembly

| No. | Patrs No. | Name | Q'ty /Unit | Recommended Q'ty/Year | | | Remarks |
|---|---|---|---|---|---|---|---|
| | | | | per 500 | per 1000 | per 2000 | |
| 1 | 40864601 | Front Cover Assy | 1 | 3 | 6 | 12 | |
| 2 | 41042501 | Front Cover Inner Baffle | 1 | 3 | 6 | 12 | |
| 3 | 40866701 | Cassette Assy | 1 | 3 | 6 | 12 | |
| 4 | 41138401 | Retard Pad Assy | 1 | 3 | 6 | 12 | |
| 5 | | | | | | | |
| 6 | 40864301 | Rear Cover | 1 | 3 | 6 | 12 | |
| 7 | 41374902 | Face Up Stacker Assy | 1 | 3 | 6 | 12 | |
| 8 | 40864401 | Left Side Cover | 1 | 3 | 6 | 12 | |
| 9 | 40864501 | Right Side Cover | 1 | 3 | 6 | 12 | |
| 10 | 40862001 | Multipurpose Tray Assy | 1 | 3 | 6 | 12 | |
| 11 | 40866301 | Multipurpose Tray Top Cover | 1 | 3 | 6 | 12 | |
| 12 | 41045801 | Link | 2 | 6 | 12 | 24 | |
| 13 | 40325101 | Multipurpose Tray Drive Gear | 1 | 3 | 6 | 12 | |
| 14 | 40952701 | Multipurpose Tray Top Cover | 1 | 3 | 6 | 12 | |
| 15 | | | | | | | |
| 16 | | | | | | | |
| 17 | | | | | | | |
| 18 | 41256204 | Print Engine Controller PWB (71K) | 1 | 3 | 6 | 12 | 1200dpi |
| | 41256206 | Print Engine Controller PWB (71K) | 1 | 3 | 6 | 12 | 600dpi |
| 19 | ~~40197101~~ | ~~Electrical Chassis Cooling Fan~~ | ~~1~~ | ~~3~~ | ~~6~~ | ~~12~~ | |
| | 40197102 | Electrical Chassis Cooling Fan | 1 | 3 | 6 | 12 | ECO-C7400-033 |
| 20 | 40864901 | CRU Basket Assembly | 1 | 3 | 6 | 12 | |
| 21 | 41275701 | Upper Cover Open Switch | 1 | 3 | 6 | 12 | |
| 22 | 41439401 | Retard Pad Assy Springs | 2 | 6 | 12 | 24 | |
| 23 | 4PB4083-2500P008 | Screw (T3×3) | 14 | - | - | - | |
| 24 | 4PB4013-3100P008 | Screw (M3×8) | 2 | - | - | - | |
| 25 | PSW2-8C | Screw (M2×8) | 1 | - | - | - | |
| 26 | 816A2323M0000 | EEPROM | 1 | 3 | 6 | 12 | |
| 27 | | | | | | | |
| 28 | 4PB4083-2500P010 | Screw (T3×10) | 13 | - | - | - | |
| 29 | 4PB4013-3100P006 | Screw (M3×6) | 42 | - | - | - | |
| 30 | 41304001 | Fuser-Unit | 1 | - | - | - | ODA(120V) |
| | 41304003 | Fuser-Unit | 1 | - | - | - | OEL/APS |
| | 41304007 | Fuser-Unit | 1 | - | - | - | ODA(230V) |

Table 7-1-2/3

| No. | Patrs No. | Name | Q'ty /Unit | Recommended Q'ty/Year | | | Remarks |
|---|---|---|---|---|---|---|---|
| | | | | per 500 | per 1000 | per 2000 | |
| 31 | 41303901 | Belt-Unit | 1 | - | - | - | ODA |
| | 41303903 | Belt-Unit | 1 | - | - | - | OEL/APS |
| 32 | 41304105 | ID-Y | 1 | - | - | - | ODA |
| | 41304106 | ID-M | 1 | - | - | - | ODA |
| | 41304107 | ID-C | 1 | - | - | - | ODA |
| | 41304108 | ID-K | 1 | - | - | - | ODA |
| | 41304109 | ID-Y | 1 | - | - | - | OEL/APS |
| | 41304110 | ID-M | 1 | - | - | - | OEL/APS |
| | 41304111 | ID-C | 1 | - | - | - | OEL/APS |
| | 41304112 | ID-K | 1 | - | - | - | OEL/APS |
| 33 | 41304205 | Toner-Cartridge_Type_C2_Y (10K) | 1 | - | - | - | ODA |
| | 41304206 | Toner-Cartridge_Type_C2_M (10K) | 1 | - | - | - | ODA |
| | 41304207 | Toner-Cartridge_Type_C2_C (10K) | 1 | - | - | - | ODA |
| | 41304208 | Toner-Cartridge_Type_C2_K (10K) | 1 | - | - | - | ODA |
| | 41304209 | Toner-Cartridge_Type_C2_Y (10K) | 1 | - | - | - | OEL |
| | 41304210 | Toner-Cartridge_Type_C2_M (10K) | 1 | - | - | - | OEL |
| | 41304211 | Toner-Cartridge_Type_C2_C (10K) | 1 | - | - | - | OEL |
| | 41304212 | Toner-Cartridge_Type_C2_K (10K) | 1 | - | - | - | OEL |
| | 41304213 | Toner-Cartridge_Type_C2_Y (10K) | 1 | - | - | - | APS |
| | 41304214 | Toner-Cartridge_Type_C2_M (10K) | 1 | - | - | - | APS |
| | 41304215 | Toner-Cartridge_Type_C2_C (10K) | 1 | - | - | - | APS |
| | 41304216 | Toner-Cartridge_Type_C2_K (10K) | 1 | - | - | - | APS |
| | 41382805 | Toner-Cartridge_Type_C2_Y (5K) | 1 | - | - | - | ODA |
| | 41382806 | Toner-Cartridge_Type_C2_M (5K) | 1 | - | - | - | ODA |
| | 41382807 | Toner-Cartridge_Type_C2_C (5K) | 1 | - | - | - | ODA |
| | 41382808 | Toner-Cartridge_Type_C2_K (5K) | 1 | - | - | - | ODA |
| | 41382809 | Toner-Cartridge_Type_C2_Y (5K) | 1 | - | - | - | OEL |
| | 41382810 | Toner-Cartridge_Type_C2_M (5K) | 1 | - | - | - | OEL |
| | 41382811 | Toner-Cartridge_Type_C2_C (5K) | 1 | - | - | - | OEL |
| | 41382812 | Toner-Cartridge_Type_C2_K (5K) | 1 | - | - | - | OEL |
| | 41382813 | Toner-Cartridge_Type_C2_Y (5K) | 1 | - | - | - | APS |
| | 41382814 | Toner-Cartridge_Type_C2_M (5K) | 1 | - | - | - | APS |
| | 41382815 | Toner-Cartridge_Type_C2_C (5K) | 1 | - | - | - | APS |
| | 41382816 | Toner-Cartridge_Type_C2_K (5K) | 1 | - | - | - | APS |

Table 7-1-3/3

| No. | Patrs No. | Name | Q'ty /Unit | Recommended Q'ty/Year | | | Remarks |
|---|---|---|---|---|---|---|---|
| | | | | per 500 | per 1000 | per 2000 | |
| 34 | 41377401 | Plate-Indicator | 1 | 3 | 6 | 12 | |
| 35 | 41716809 | PCB Assy-SWA | 1 | 3 | 6 | 12 | |
| 36 | 8164323M0000 | EEPROM(CU) | 1 | 3 | 6 | 12 | |
| 37 | 41356111 | Board-TNO | 1 | 3 | 6 | 12 | |
| 38 | | | | | | | |
| 39 | 41437418 | Board-Memory 64MB | 1 | 3 | 6 | 12 | 1200dpi-ODA |
| | 41437414 | Board-Memory 64MB | 1 | 3 | 6 | 12 | 1200dpi-OEL |
| | 41437410 | Board-Memory 64MB | 1 | 3 | 6 | 12 | 1200dpi-APS |
| 40 | 41437419 | Board-Memory 128MB | 1 | 3 | 6 | 12 | 1200dpi Duplex-ODA |
| | 41437415 | Board-Memory 128MB | 1 | 3 | 6 | 12 | 1200dpi Duplex-OEL |
| | 41437411 | Board-Memory 128MB | 1 | 3 | 6 | 12 | 1200dpi Duplex-APS |
| 41 | 41376902 | Board-MLET B09 | (1) | (3) | (6) | (12) | Option-OEL |
| | 41437302 | Board-MLET B09 | (1) | (3) | (6) | (12) | Option-APS |
| 42 | 41376005 | HDD Assy | (1) | (3) | (6) | (12) | Option-ODA |
| | 41376004 | HDD Assy | (1) | (3) | (6) | (12) | Option-OEL |
| | 41376002 | HDD Assy | (1) | (3) | (6) | (12) | Option-APS |
| 43 | 41848501 | Board Assy.-CU(Maintenance) | 1 | 3 | 6 | 12 | |
| 44 | 41278601 | Guide-Rail(A) | 1 | 3 | 6 | 12 | ECO-C7400-093 |
| 45 | 41278701 | Guide-Rail(B) | 1 | 3 | 6 | 12 | |
| 46 | 41410201 | Motor-Fan | 1 | 3 | 6 | 12 | |
| 47 | 41467401 | Plate-FG(Centro) | 1 | 3 | 6 | 12 | |
| 48 | 41254601 | Plate-Blank | 1 | 3 | 6 | 12 | ECO-C7400-093 |
| 49 | 41723901 | Screw | 1 | - | - | - | ECO-C7400-093 |
| 50 | 41723901 | Screw | 2 | - | - | - | |
| 51 | 4LB-102100-2A | Collar | 1 | - | - | - | ECO-C7400-093 |

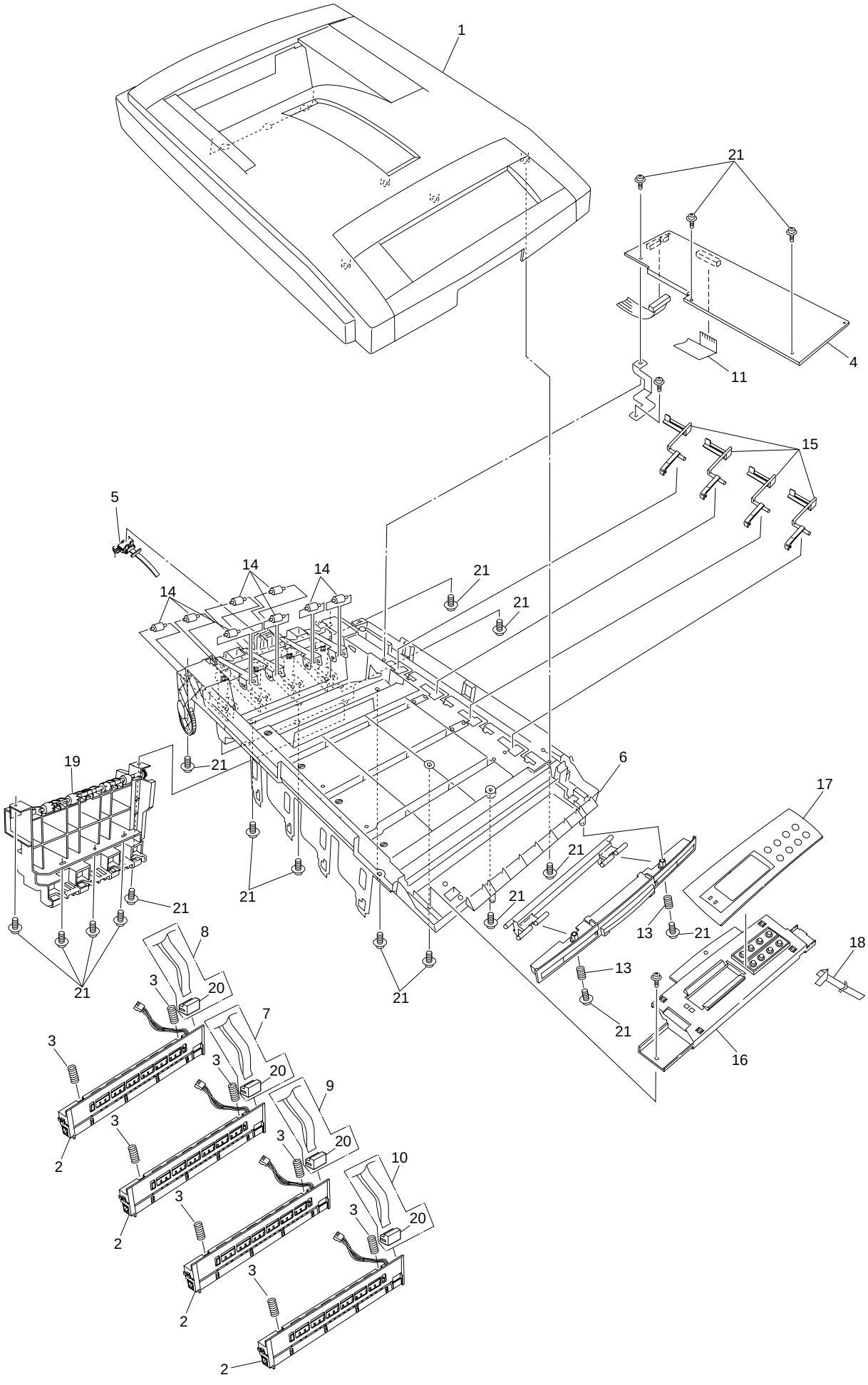
1
21
4
11
15
5
14
14
14
21
21
21
19
6
17
21
21
21
21
21
21
13
21
13
18
21
21
8
3
20
7
3
3
20
9
3
3
20
10
3
3
20
2
2
2
2

Figure 7-2

Table 7-2

# Top Cover Assembly

| No. | Parts No. | Name | Q'ty /Unit | Recommended Q'ty/Year | | | Remarks |
|---|---|---|---|---|---|---|---|
| | | | | per 500 | per 1000 | per 2000 | |
| 1 | 40859701 | Top Cover | 1 | 3 | 6 | 12 | |
| 2 | ~~41071401~~ | ~~LED Assy (1200dpi)~~ | ~~4~~ | ~~12~~ | ~~24~~ | ~~48~~ | ~~~~ |
| | 41072401 | LED Assy (1200dpi) | 4 | 12 | 24 | 48 | |
| | 41072402 | LED Assy (600dpi) | 4 | 12 | 24 | 48 | |
| 3 | 40861001 | LED Assy Spring | 8 | 24 | 48 | 96 | |
| 4 | 41257901 | LED Control PWB (Y71) | 1 | 3 | 6 | 12 | |
| 5 | 40365404 | Stacker Full Sensor | 1 | 3 | 6 | 12 | |
| 6 | 41316501 | Top Cover Inner Frame Kit | 1 | 3 | 6 | 12 | |
| 7 | 41309603 | LED Harness M | 1 | 3 | 6 | 12 | |
| 8 | 41309604 | LED Harness C | 1 | 3 | 6 | 12 | |
| 9 | 41309602 | LED Harness Y | 1 | 3 | 6 | 12 | |
| 10 | 41309601 | LED Harness K | 1 | 3 | 6 | 12 | |
| 11 | 41593101 | LED Control PWB Tape Harness | 1 | 3 | 6 | 12 | |
| 12 | | | | | | | |
| 13 | | | | | | | |
| 14 | ~~40316701~~ | ~~Eject Roller~~ | ~~8~~ | ~~24~~ | ~~48~~ | ~~96~~ | ~~~~ |
| | 41765601 | Eject Roller | 8 | 24 | 48 | 96 | ECO-C7400-033 |
| 15 | 40860601 | Toner Sensor | 4 | 12 | 24 | 48 | |
| 16 | 40866101 | Control Panel Assy | 1 | 3 | 6 | 12 | |
| 17 | 40866201 | Control Panel Bezel | 1 | 3 | 6 | 12 | 600dpi |
| | 40866202 | Control Panel Bezel | 1 | 3 | 6 | 12 | 1200dpi |
| 18 | ~~2381005P0015~~ | ~~Control Panel Tape Harness~~ | ~~1~~ | ~~3~~ | ~~6~~ | ~~12~~ | ~~~~ |
| | 2381003P0014 | Control Panel Tape Harness | 1 | 3 | 6 | 12 | ECO-C7400-001 |
| 19 | 40861501 | Eject Guide Assy | 1 | 3 | 6 | 12 | |
| 20 | 2251001P0260 | 26pin LED Connector | 4 | 12 | 24 | 48 | |
| 21 | 4PB4083-2500P008 | Screw (T3×8) | 19 | - | - | - | |
| | 41733701 | Gear-Inner | 2 | 6 | 12 | 24 | ECO-C7400-005 |
| | 41778001 | Gear-Inner | 2 | 6 | 12 | 24 | ECO-C7400-024 |

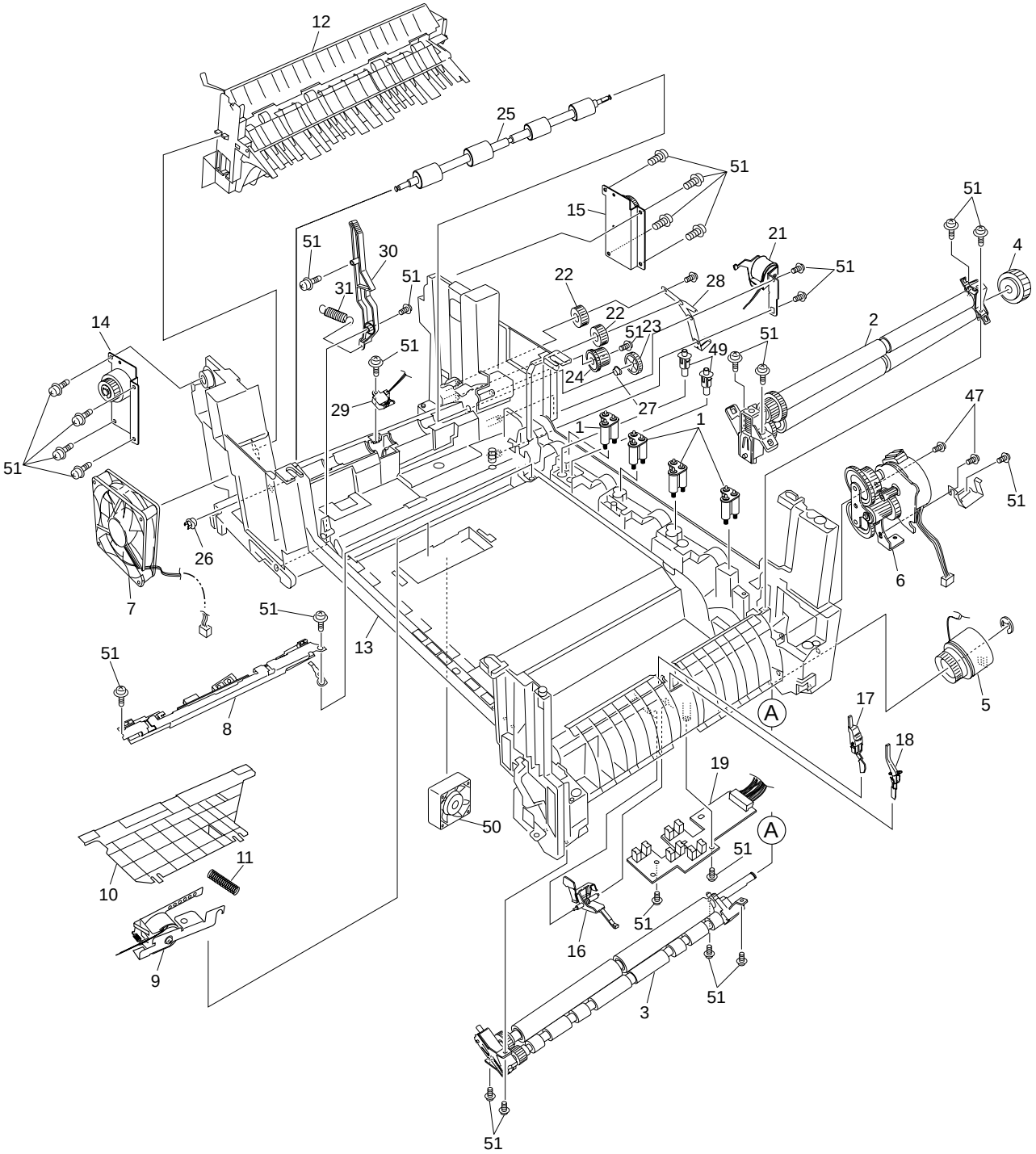
12
25
51
15
51
30
31
51
22
21
51
28
4
22
51
23
2
14
51
49
51
24
29
27
47
1
1
51
51
26
6
7
51
13
51
8
5
A
17
18
19
50
A
51
11
10
51
16
9
51
3
51

Figure 7-3-1/2

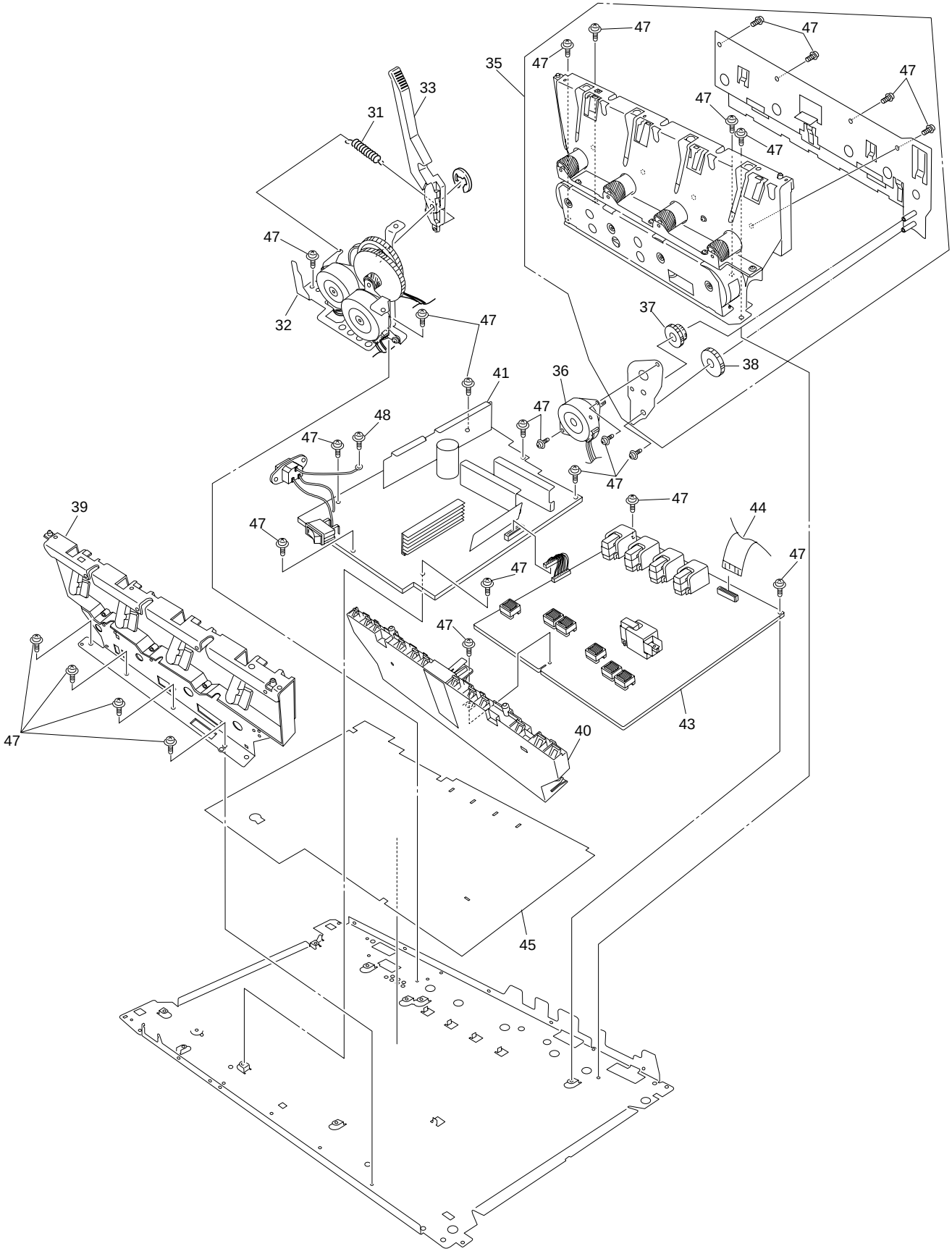
47
47
47
35
47
47
33
31
47
47
32
47
37
38
41
36
47
48
47
47
47
39
47
44
47
47
47
47
43
40
45

Figure 7-3-2/2

Table 7-3-1/2

# Printer Unit Chassis

| No. | Parts No. | Name | Q'ty /Unit | Recommended Q'ty/Year | | | Remarks |
|---|---|---|---|---|---|---|---|
| | | | | per 500 | per 1000 | per 2000 | |
| 1 | 41189701 | Drum contact Assy | 4 | 12 | 24 | 48 | |
| 2 | 40844301 | Registration Roller Assy (A) | 1 | 3 | 6 | 12 | |
| 3 | 40844303 | Registration Roller Assy (B) | 1 | 3 | 6 | 12 | |
| 4 | 40845401 | Registration Drive Gear | 1 | 3 | 6 | 12 | |
| 5 | 41187101 | Registration Clutch | 1 | 3 | 6 | 12 | |
| 6 | 40845801 | Registration Motor Assy | 1 | 3 | 6 | 12 | |
| 7 | 3PB4076-5290P001 | Main Cooling Fan | 1 | 3 | 6 | 12 | |
| 8 | 41346801 | Color Registration Sensor Assy | 1 | 3 | 6 | 12 | |
| 9 | 41253701 | Registration Shutter Solenoid | 1 | 3 | 6 | 12 | |
| 10 | 41275201 | Registration Shutter | 1 | 3 | 6 | 12 | |
| 11 | 41275301 | Registration Shutter Spring | 1 | 3 | 6 | 12 | |
| 12 | 40859201 | Duplex Guide Assy | 1 | 3 | 6 | 12 | |
| 13 | 40841101 | Printer Unit Chassis | 1 | 3 | 6 | 12 | |
| 14 | 41312801 | Left Top Cover Spring Assy | 1 | 3 | 6 | 12 | |
| 15 | 41312901 | Right Top Cover Spring Assy | 1 | 3 | 6 | 12 | |
| 16 | 40841601 | Entrance Sensor Actuator #1 | 1 | 3 | 6 | 12 | |
| 17 | 40841701 | Entrance Sensor Actuator #2 | 1 | 3 | 6 | 12 | |
| 18 | 40841801 | Entrance Sensor Actuator #3 | 1 | 3 | 6 | 12 | |
| 19 | 41258301 | Entrance Sensor PWB (R71) | 1 | 3 | 6 | 12 | |
| 20 | | | | | | | |
| 21 | 41253601 | Duplex Gate Solenoid Assy | 1 | 3 | 6 | 12 | |
| 22 | 40842401 | Fuser Drive Gear -A | 2 | 6 | 12 | 24 | |
| 23 | 40316301 | Fuser Drive Gear -B | 1 | 3 | 6 | 12 | |
| 24 | 41067201 | Fuser Drive Gear -C | 1 | 3 | 6 | 12 | |
| 25 | 40323901 | Fuser Exit Roller | 1 | 3 | 6 | 12 | |
| 26 | 4PP4076-3949P001 | Fuser Exit Roller Bushing (L) | 1 | 3 | 6 | 12 | |
| 27 | 4PP4043-4489P001 | Fuser Exit Roller Bushing (R) | 1 | 3 | 6 | 12 | |
| 28 | 40842501 | Fuser Exit Roller Contact | 1 | 3 | 6 | 12 | |
| 29 | 41073601 | Exit Sensor Assy | 1 | 3 | 6 | 12 | |
| 30 | 40841301 | Fuser Latching Handle (L) | 1 | 3 | 6 | 12 | |
| 31 | 40841501 | Fuser Latching Handle Springs | 2 | 6 | 12 | 24 | |
| 32 | 40848801 | Belt Motor Assy | 1 | 3 | 6 | 12 | |
| 33 | 40841401 | Fuser Latching Handle (R) | 1 | 3 | 6 | 12 | |
| 34 | | | | | | | |
| 35 | 40847301 | Main Motor Assy | 1 | 3 | 6 | 12 | |

Table 7-3-2/2

| No. | Parts No. | Name | Q'ty /Unit | Recommended Q'ty/Year | | | Remarks |
|---|---|---|---|---|---|---|---|
| | | | | per 500 | per 1000 | per 2000 | |
| 36 | 40846001 | Main Feeder Drive Motor | 1 | 3 | 6 | 12 | |
| 37 | 40848501 | Main Feeder Drive Gear A | 1 | 3 | 6 | 12 | |
| 38 | 40848601 | Main Feeder Drive Gear B | 1 | 3 | 6 | 12 | |
| 39 | 41303601 | Left Plate Assy | 1 | 3 | 6 | 12 | |
| 40 | 40850201 | Contact Assy | 1 | 3 | 6 | 12 | |
| 41 | 40737401 | Power-Unit AC-DC-switching(115V) | 1 | 3 | 6 | 12 | |
| | 40737402 | Power-Unit AC-DC-switching(115V) | 1 | 3 | 6 | 12 | ECO-C7400-064 |
| | 40737501 | Power-Unit AC-DC-switching(230V) | 1 | 3 | 6 | 12 | |
| | 40737502 | Power-Unit AC-DC-switching(230V) | 1 | 3 | 6 | 12 | ECO-C7400-064 |
| 42 | | | | | | | |
| 43 | 40737601 | Power-Unit (high-voltage) | 1 | 3 | 6 | 12 | |
| 44 | ~~2381018P0001~~ | ~~HV Tape Harness~~ | ~~1~~ | ~~3~~ | ~~6~~ | ~~12~~ | |
| | 2381003P0016 | HV Tape Harness | 1 | 3 | 6 | 12 | ECO-C7400-001 |
| 45 | 41128101 | Power Supply Insulator | 1 | 3 | 6 | 12 | |
| 46 | | | | | | | |
| 47 | 4PB4013-3100P006 | Screw (M3×6) | 26 | - | - | - | |
| 48 | PSW4-8C | Screw (M4×8) | 1 | - | - | - | |
| 49 | 41346301 | Transfer Contact Assy | 2 | 6 | 12 | 24 | |
| 50 | 41469001 | Power Cooling Fan | 1 | 3 | 6 | 12 | |
| 51 | 4PB4083-2500P008 | Screw (T3×8) | 29 | - | - | - | |

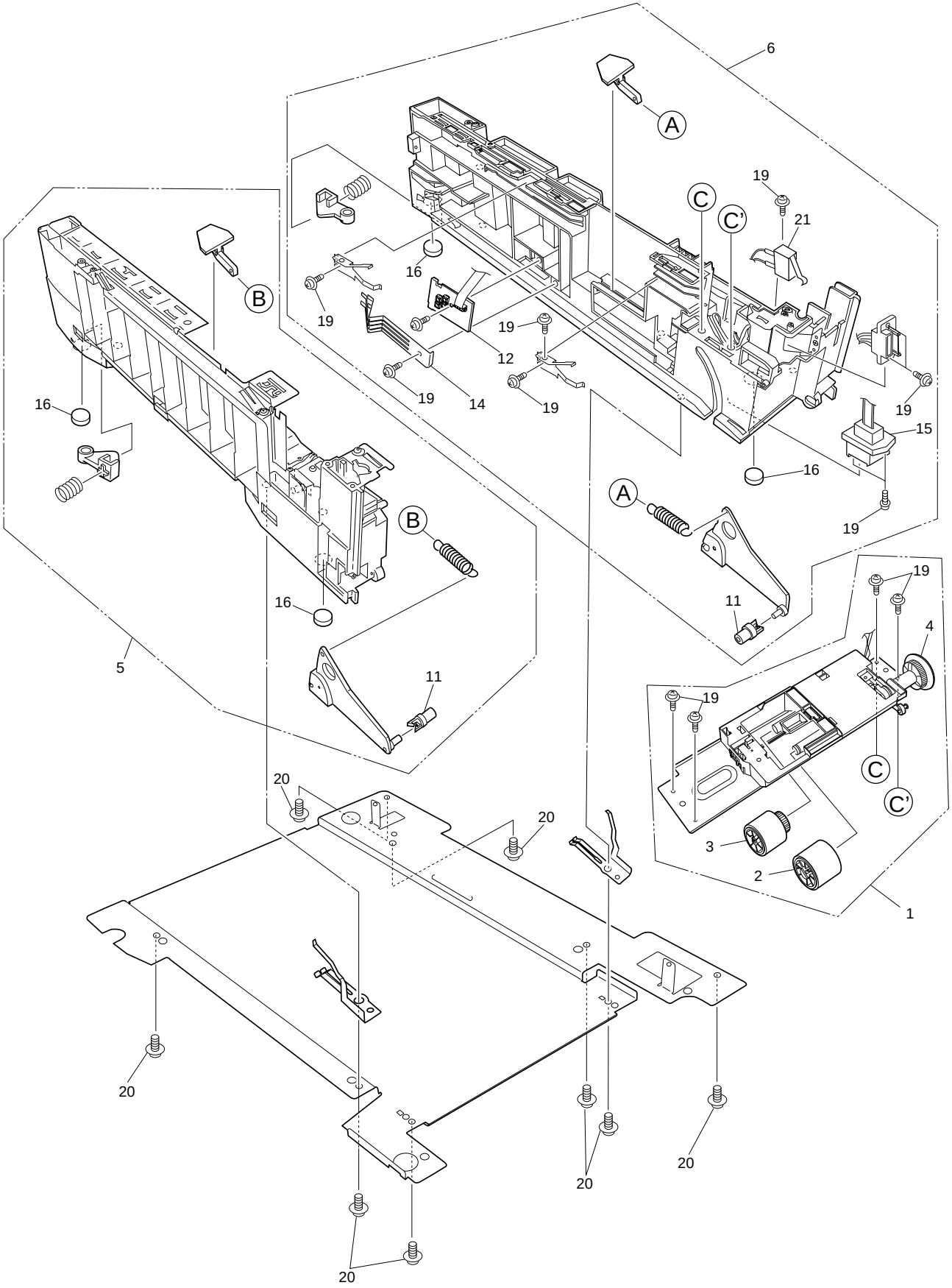
6
A
19
C
C'
21
16
B
19
19
12
19
14
19
19
15
16
16
A
19
B
16
11
19
4
5
11
19
C
C'
20
20
3
2
1
20
20
20
20

Figure 7-4

Table 7-4

# Paper Tray Guide

| No. | Parts No. | Name | Q'ty /Unit | Recommended Q'ty/Year | | | Remarks |
|---|---|---|---|---|---|---|---|
| | | | | per 500 | per 1000 | per 2000 | |
| 1 | 40839801 | Main Feed Assy | 1 | 3 | 6 | 12 | |
| 2 | 40371301 | Feed Roller | 1 | 3 | 6 | 12 | |
| 3 | 40313201 | Nudger Roller | 1 | 3 | 6 | 12 | |
| 4 | 40325401 | Main Feeder Drive Gear | 1 | 3 | 6 | 12 | |
| 5 | 40839001 | Left Cassette Guide Assy | 1 | 3 | 6 | 12 | |
| 6 | 40839401 | Right Cassette Guide Assy | 1 | 3 | 6 | 12 | |
| 7 | | | | | | | |
| 8 | | | | | | | |
| 9 | | | | | | | |
| 10 | | | | | | | |
| 11 | 40349701 | Plastic Roller | 2 | 6 | 12 | 24 | |
| 12 | 40368304 | Paper Size Sensing PWB PXC | 1 | 3 | 6 | 12 | |
| 13 | | | | | | | |
| 14 | 4PP4076-5360P001 | Paper Size Actuator | 1 | 3 | 6 | 12 | |
| 15 | ~~41309301~~ | ~~2nd Tray Connector~~ | ~~1~~ | ~~3~~ | ~~6~~ | ~~12~~ | |
| | 41309101 | 2nd Tray Connector | 1 | 3 | 6 | 12 | |
| 16 | ~~4PB4016-1960P002~~ | ~~Foot~~ | ~~4~~ | ~~12~~ | ~~24~~ | ~~48~~ | |
| | 4PB4016-1960P004 | Foot | 4 | 12 | 24 | 48 | ECO-C7400-033 |
| 17 | | | | | | | |
| 18 | | | | | | | |
| 19 | 4PB4083-2500P008 | Screw (T3×8) | 13 | - | - | - | |
| 20 | 4PB4083-5670P002 | Screw (T4×10) | 8 | - | - | - | |
| 21 | 41275901 | Front Cover Open Switch | 1 | 3 | 6 | 12 | |

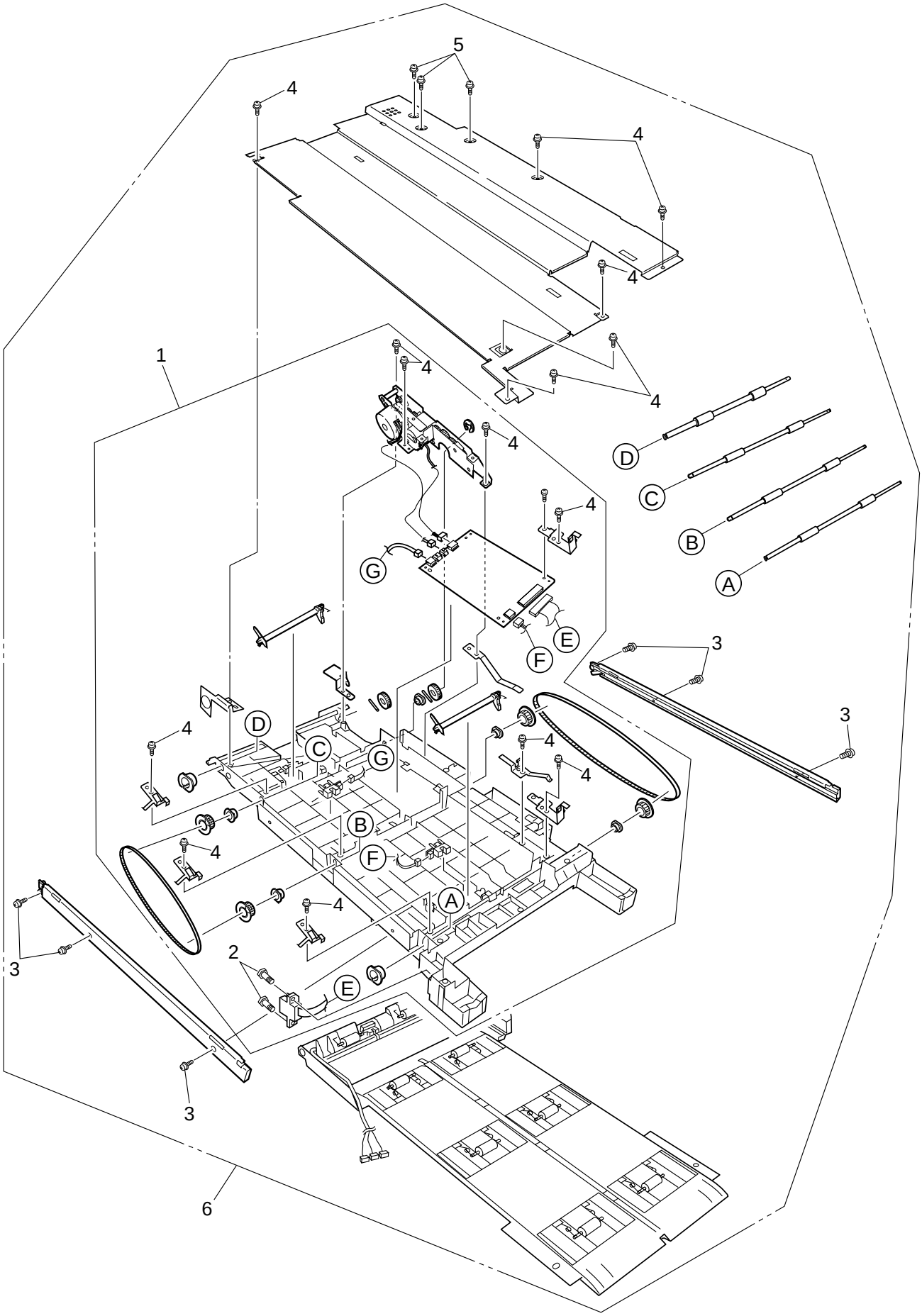


Figure 7-5

Table 7-5

# Duplex Unit

| No. | Parts No. | Name | Q'ty /Unit | Recommended Q'ty/Year | | | Remarks |
|---|---|---|---|---|---|---|---|
| | | | | per 500 | per 1000 | per 2000 | |
| 1 | 41305301 | Duplex Transport Assy | 1 | 3 | 6 | 12 | |
| 2 | 4PB4043-4718P001 | Screw (SP3×10) | 2 | - | - | - | |
| 3 | 4PB4083-2500P010 | Screw (T3×10) | 6 | - | - | - | |
| 4 | 4PB4083-2500P008 | Screw (T3×8) | 15 | - | - | - | |
| 5 | 4PB4013-3100P006 | Screw (M3×6) | 3 | - | - | - | |
| 6 | 41372901 | Duplex Unit | 1 | - | - | - | ODA |
| | 41372903 | Duplex Unit | 1 | - | - | - | OEL |
| | 41372907 | Duplex Unit | 1 | - | - | - | APS |

# APPENDIX A CENTRONICS PARALLEL INTERFACE

1) Connector
   - Printer Side: 36-pin receptacle (female)
     Equivalent of type 57RE-40360-830B-D29 (made by Daiichi Denshi Kogyo)
   - Cable Side: 36-pin plug (male)
     Equivalent of type 57-30360 (made by Daiichi Denshi Kogyo)
     Equivalent of plug 552274-1 (AMP), 52073-1 (AMP)

2) Cable
   - Use a cable of not more than 1.8m.
     (Use twisted and shielded pair wires for antinoise measures.)

***Note!*** The cable is an extra-cost option

3) A list of Parallel I/F Signals

| Pin No. | Signal Name | Signal Direction | Function |
|---|---|---|---|
| 1 | DATA STROBE | →PR | Parallel data sampling strobe |
| 2 | DATA BIT - 1 | | |
| 3 | DATA BIT - 2 | | |
| 4 | DATA BIT - 3 | | |
| 5 | DATA BIT - 4 | →PR | Parallel input data |
| 6 | DATA BIT - 5 | | |
| 7 | DATA BIT - 6 | | |
| 8 | DATA BIT - 7 | | |
| 9 | DATA BIT - 8 | | |
| 10 | ACKNOWLEDGE | ←PR | Completion of data input |
| 11 | BUSY | ←PR | Printing operation, Alarming, Paper empty |
| 12 | PAPER END | ←PR | Paper empty |
| 13 | SELECT | ←PR | Select state (on-line) |
| 14 | Auto Feed | →PR | Mode switch request |
| 15 | - | | (Unassigned) |
| 16 | 0V | | Signal earthing |
| 17 | CHASSIS GROUND | | Frame earthing |
| 18 | +5V | ←PR | Supply voltage (Max. 50mA) Min. 4.75V |
| 19 ~ 30 | 0V Signal ground | | Signal grounding |
| 31 | INPUT PRIME | →PR | Initialization |
| 32 | FAULT | ←PR | Paper empty, Alarming |
| 33 | 0V | | Signal earthing |
| 34 | - | | (Unassigned) |
| 35 | - | | High level (3.3kÉ∂) |
| 36 | Select In | →PR | Mode switch reques |

- Connector Pins Layout

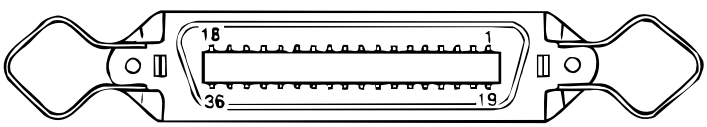

4) Signal Levels
- Low Level: 0V to +0.8V
- High Level: +2.4V to +5.0v

5) Specifications

| Item | Description |
|---|---|
| Mode | Compatibility mode, Nibble mode, ECP mode |
| Data Bit Length | Compatibility: 8, Nibble: 4, ECP: 9 bits |
| Control | Initial connection control in each mode. Storing of data from host in receive buffer. Busy control. Signal Read control. |

6) Timing Chart

Compatible Mode

a) Timing for receiving data

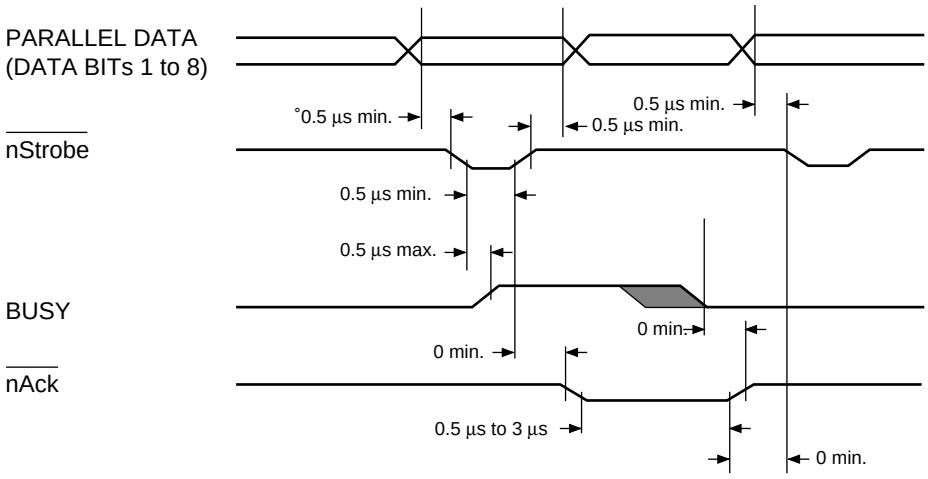


b) On-line Timing for switching to off-line by on-line SW

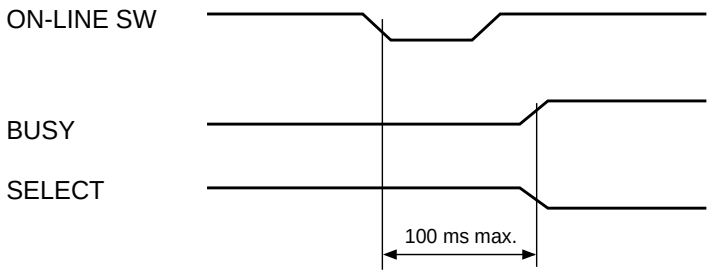

c) Off-line Timing for switching to on-line by on-line SW

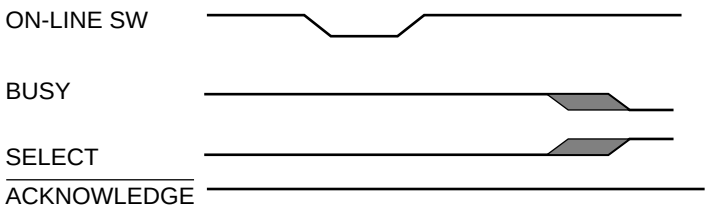


d) nlnit timing (under enabling input prime signal)

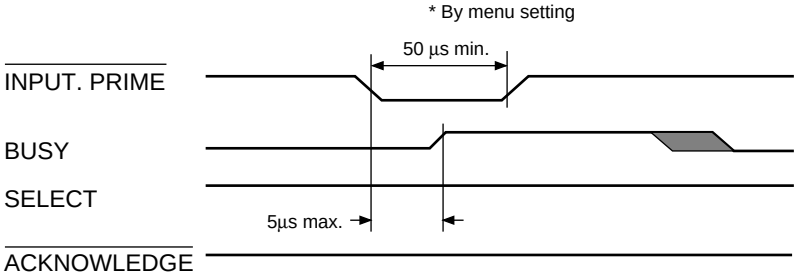


Nibble Mode

IEEE-1284-specification compliant

ECP Mode

IEEE-1284-specification compliant

# APPENDIX B 2ND/3RD TRAY MAINTENANCE

## 1. Parts Replacement

### 1.1 Cover Idle Roller Assy

(1) Unscrew the four screws ① to remove the cover side ② and the plate cover PCB ③.

(2) Unscrew the two screws ④ to demount the cover idle roller Assy ⑤.

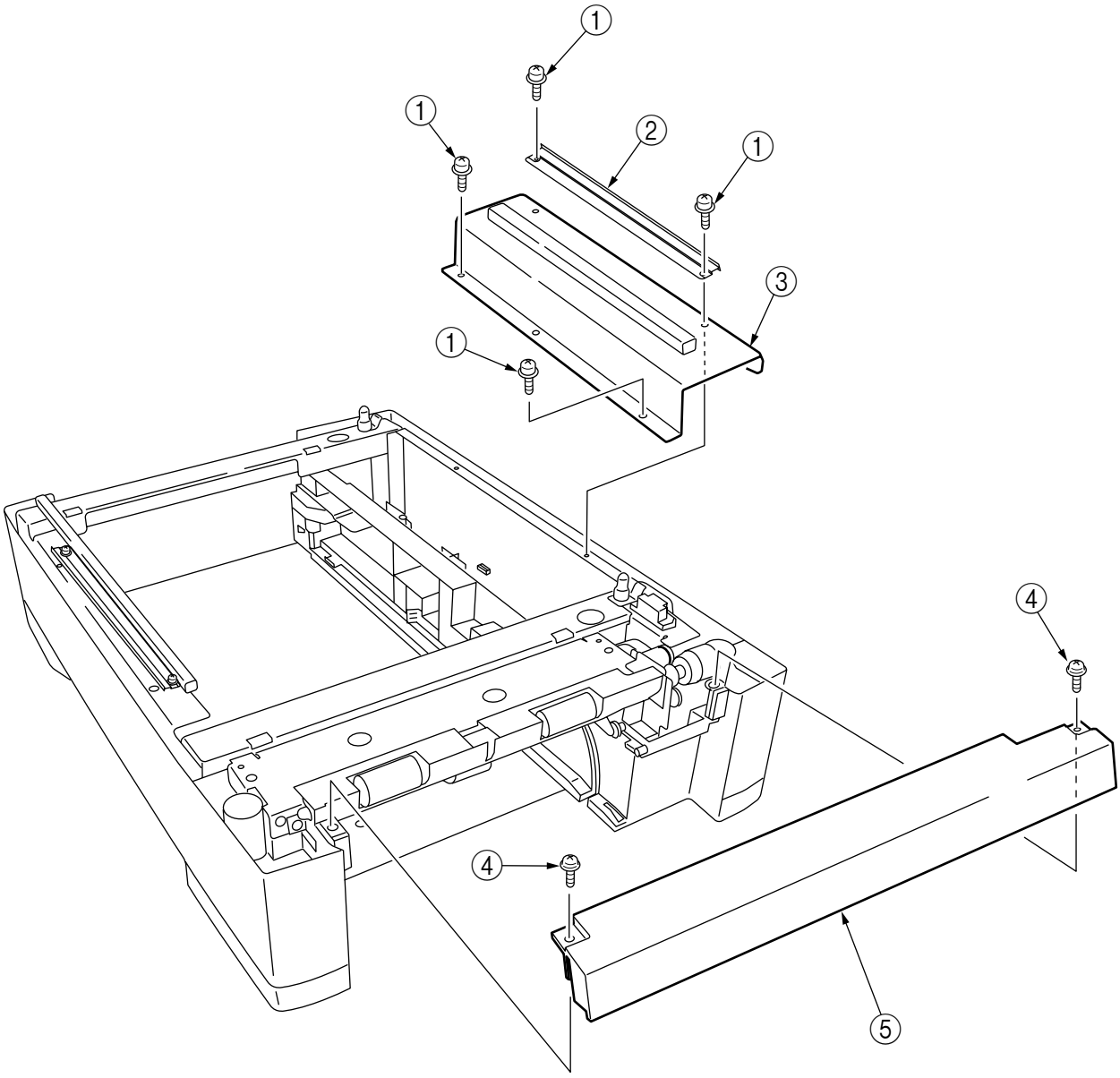

1.2 PCB

(1) Unscrew the four screws ① to remove the plate cover PCB ②.

(2) Remove the connectors (at seven places) and the two screws ③, then demount the board ④.

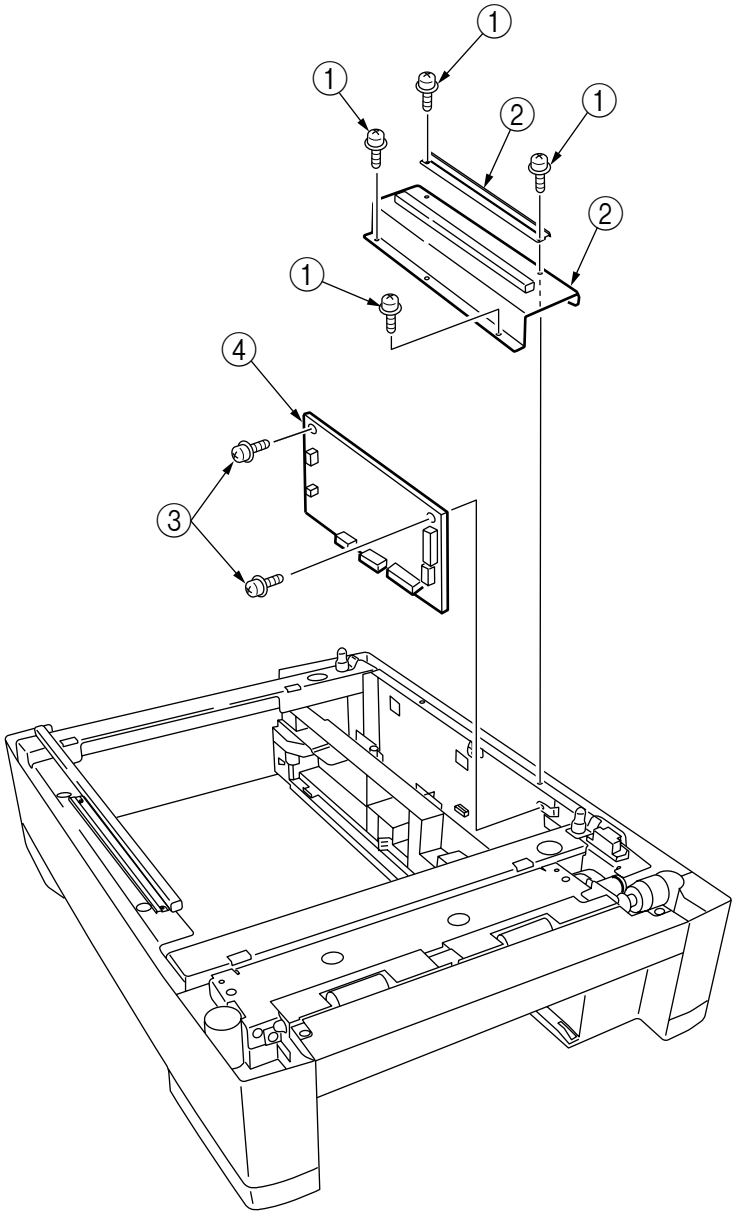

1.3 Feeder Drive Assy

(1) Remove the four screws ①, six screws ② and the eight screws ③.
(2) Remove the cover sides ④ and ⑤, the plate cover PCB ⑥ and the frame hopping Assy ⑦.
(3) Remove the E ring ⑧, the clutch ⑨ and the two screws ⑩.
(4) Unscrew the two screws ⑪ to remove the core ⑫ and the connector ⑬.
(5) Unscrew the two screws ⑭, then detach the motor ⑮.
(6) Unscrew the tow screws ⑯ to remove the connector ⑰.

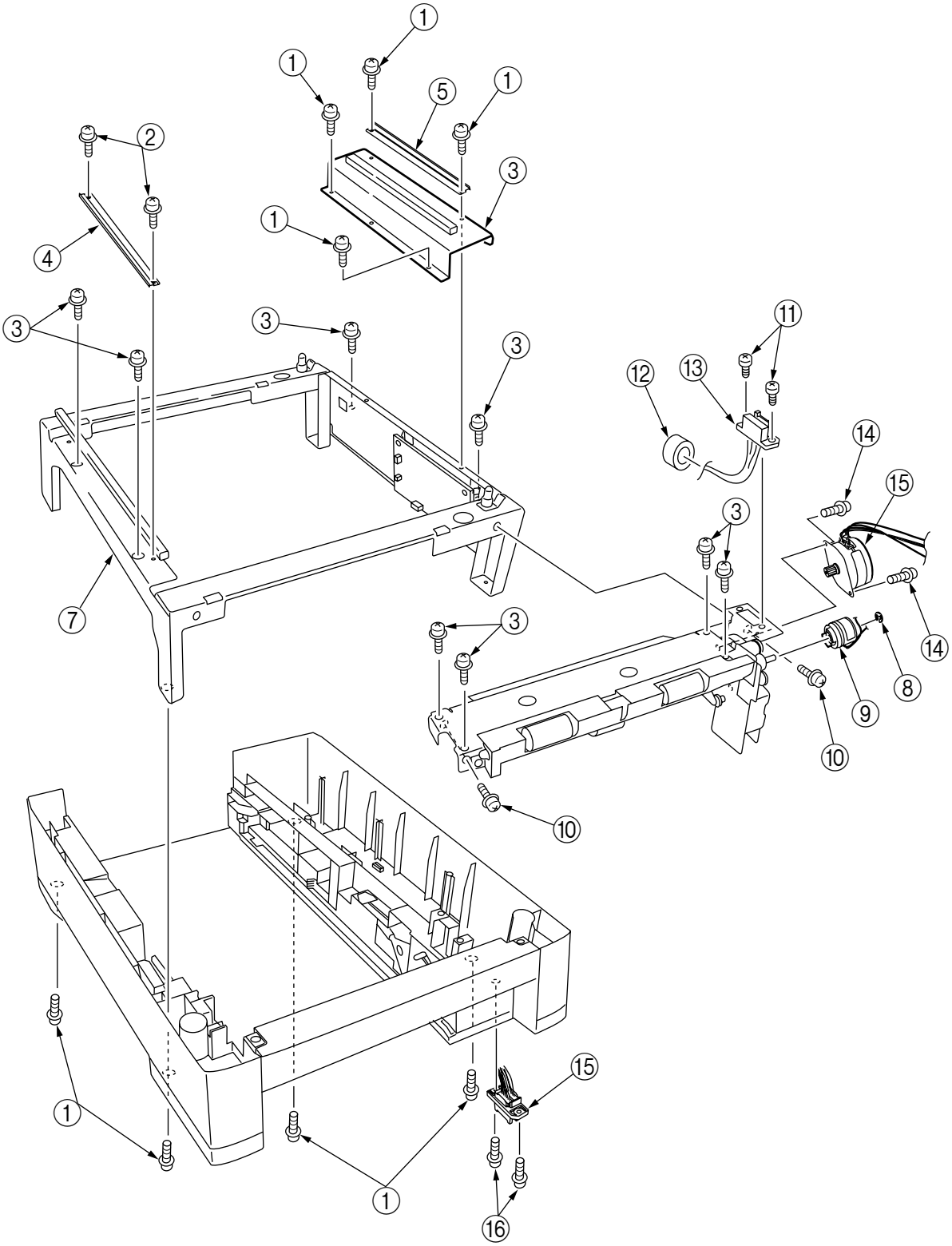

## 2. C7400/C7200 2nd/3rd Tray PARTS LIST

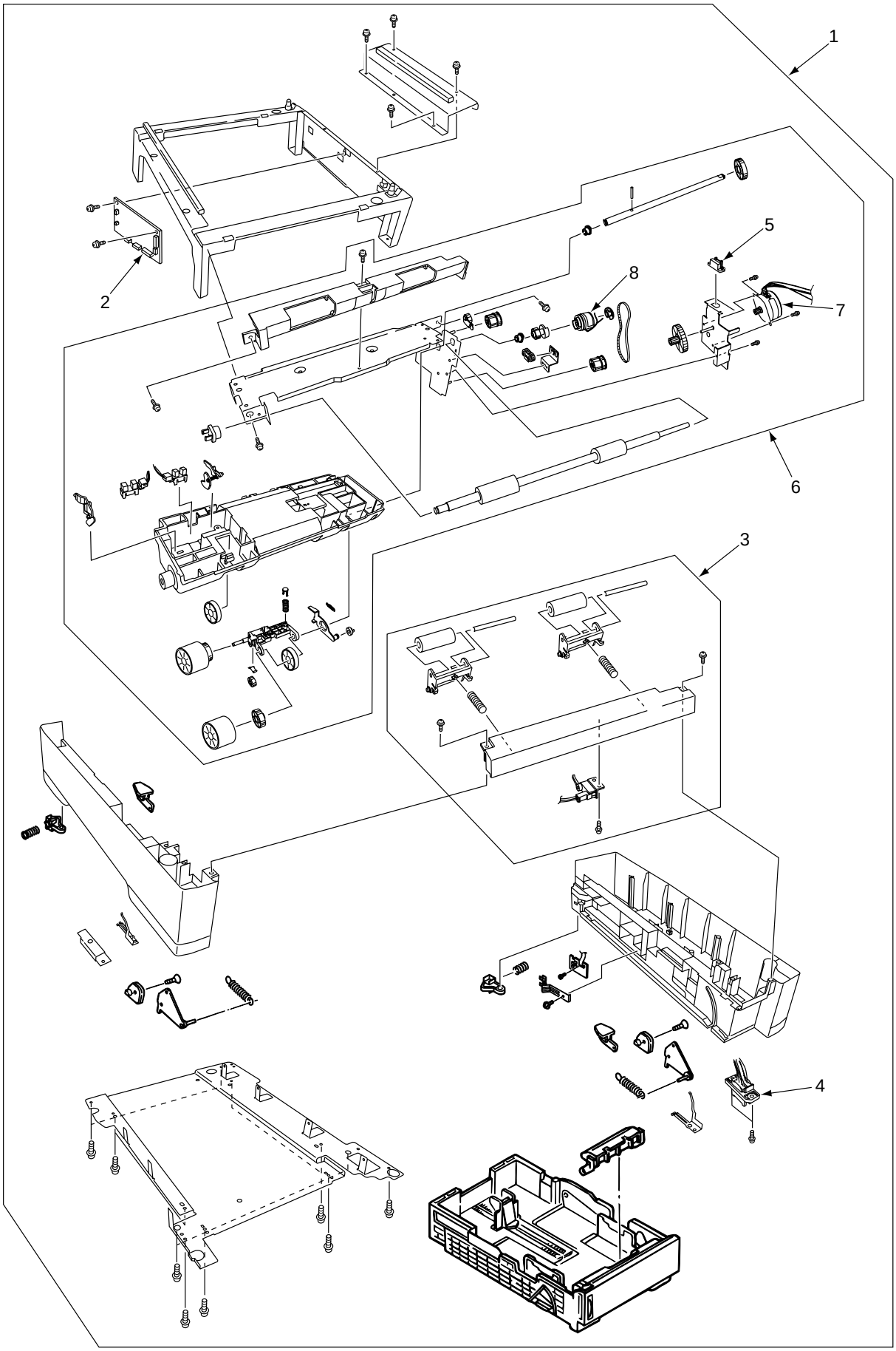

Table 2-1 C7400/C7200 2nd/3rd Tray

| No. | Parts No. | Name | Q'ty /Unit | Recommended Q'ty/Year | | | Remarks |
|---|---|---|---|---|---|---|---|
| | | | | per 500 | per 1000 | per 2000 | |
| 1 | 41304501 | 2nd/3rd Tray 500Sheet Feeder Assembly | 1 | — | — | — | ODA |
| | 41304503 | 2nd/3rd Tray 500Sheet Feeder Assembly | 1 | — | — | — | OEL/APS |
| 2 | 41780302 | Board-V7X | 1 | 3 | 6 | 12 | ECO-C7400-023 |
| 3 | ~~41400502~~ | ~~Cover-Front OP Assy~~ | ~~1~~ | ~~3~~ | ~~6~~ | ~~12~~ | |
| | 41400501 | Idler Roller Assembly | 1 | 3 | 6 | 12 | ECO-C7400-033 |
| 4 | 41462301 | Lower Connector W/harness | 1 | 3 | 6 | 12 | |
| 5 | 41462201 | Upper Connector W/harness | 1 | 3 | 6 | 12 | |
| 6 | 41581101 | Feeder Drive Assembly | 1 | 3 | 6 | 12 | |
| 7 | 40366501 | Feeder Motor | 1 | 3 | 6 | 12 | |
| 8 | ~~41401001~~ | ~~Feder Cluch~~ | ~~1~~ | ~~3~~ | ~~6~~ | ~~12~~ | |
| | 41859201 | Feder Cluch | 1 | 3 | 6 | 12 | ECO-C7400-033 |

OKI

# C7200/C7400
## Color LED Page Printer

## Spare Parts List

[Extracted from C7200/C7400 Maintenance Manual]

ODA/OEL/INT

2002-12-12 Rev.9

## PARTS LIST

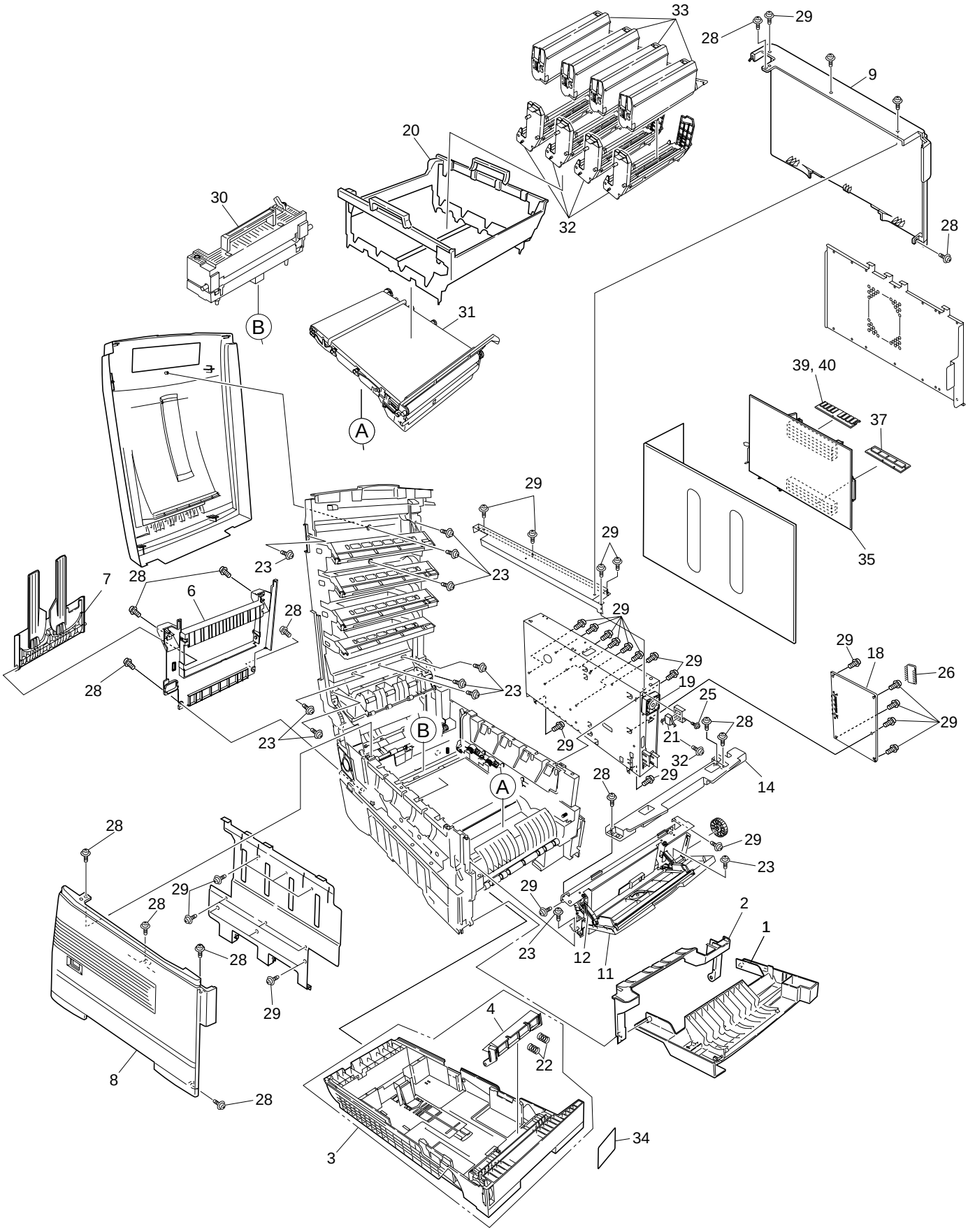


Figure 7-1-1/3

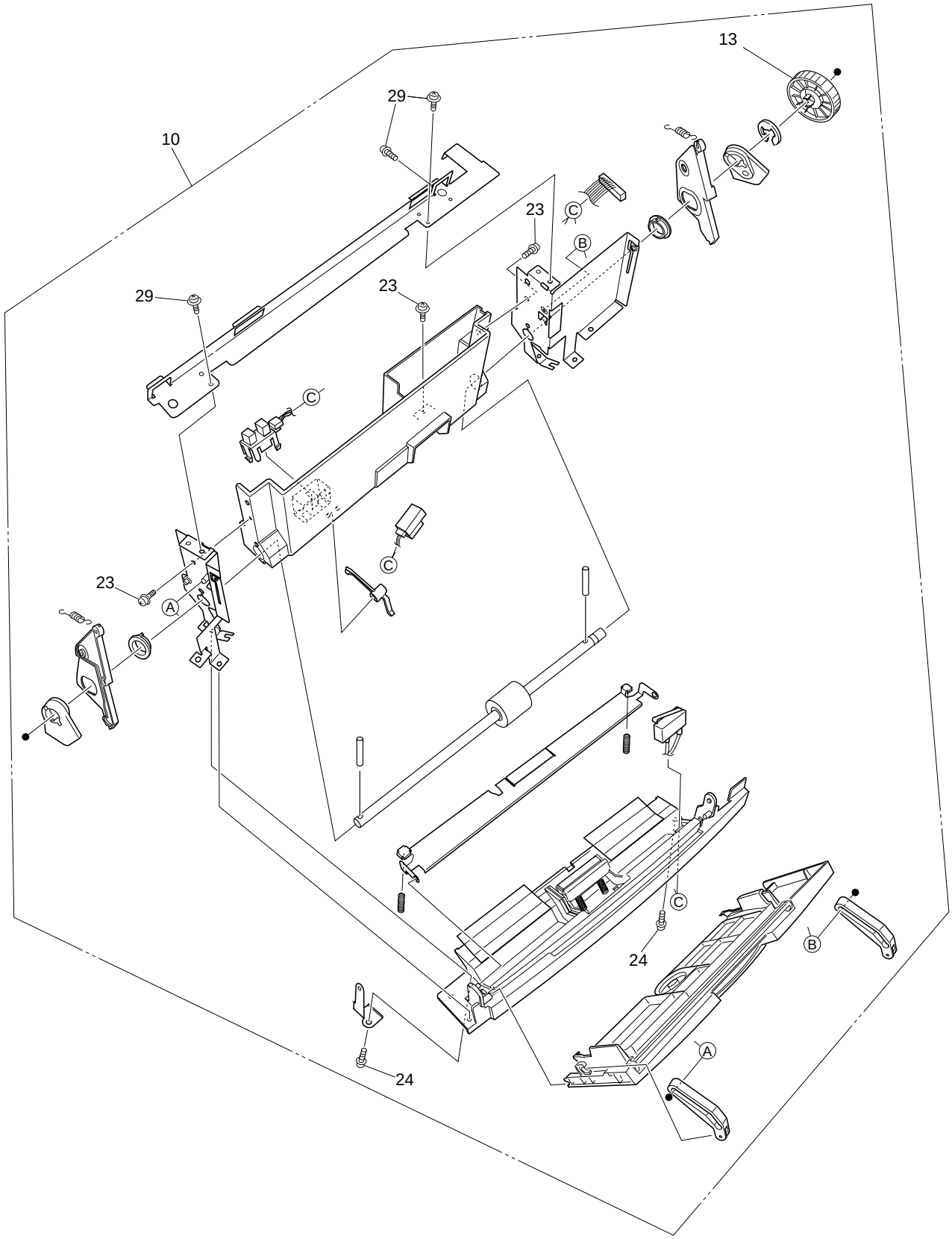


Figure 7-1-2/3

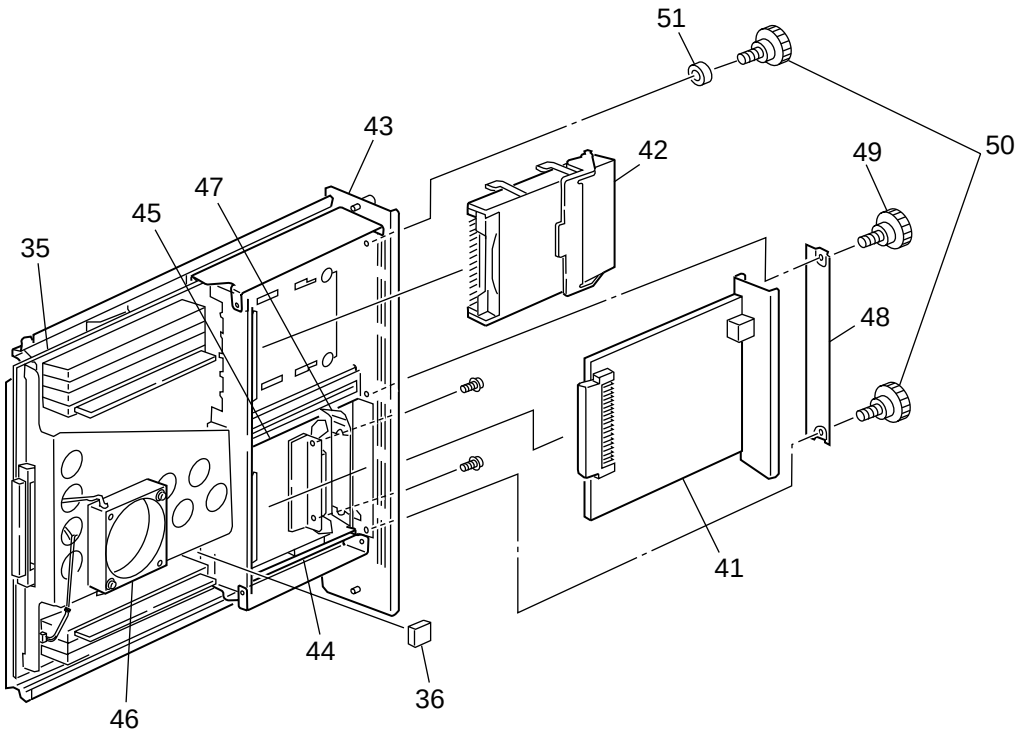


Board Assy.-cu 43 (Maintenance) [41848502] consists of a set of a bracket to support Motor Fan 46 (41410201), a sheet metal to secure PCB Assy-SWA 35 (41716809), a gasket bonded to that sheet metal, and screws (attached to the assembly).

The member 35 (PCB Assy-SWA [41716809]), which must be replaced together with the metal and its grouped parts in 43, is given a set of part Nos., i.e. the No. of the discrete PCB and the No. of the metal.

Figure 7-1-3/3

Table 7-1-1/3

# Main Assembly

| No. | Patrs No. | Name | Q'ty /Unit | Recommended Q'ty/Year | | | Remarks |
|---|---|---|---|---|---|---|---|
| | | | | per 500 | per 1000 | per 2000 | |
| 1 | 40864601 | Front Cover Assy | 1 | 3 | 6 | 12 | |
| 2 | 41042501 | Front Cover Inner Baffle | 1 | 3 | 6 | 12 | |
| 3 | 40866701 | Cassette Assy | 1 | 3 | 6 | 12 | |
| 4 | 41138401 | Retard Pad Assy | 1 | 3 | 6 | 12 | |
| 5 | | | | | | | |
| 6 | 40864301 | Rear Cover | 1 | 3 | 6 | 12 | |
| 7 | 41374902 | Face Up Stacker Assy | 1 | 3 | 6 | 12 | |
| 8 | 40864401 | Left Side Cover | 1 | 3 | 6 | 12 | |
| 9 | 40864501 | Right Side Cover | 1 | 3 | 6 | 12 | |
| 10 | 40862001 | Multipurpose Tray Assy | 1 | 3 | 6 | 12 | |
| 11 | 40866301 | Multipurpose Tray Top Cover | 1 | 3 | 6 | 12 | |
| 12 | 41045801 | Link | 2 | 6 | 12 | 24 | |
| 13 | 40325101 | Multipurpose Tray Drive Gear | 1 | 3 | 6 | 12 | |
| 14 | 40952701 | Multipurpose Tray Top Cover | 1 | 3 | 6 | 12 | |
| 15 | | | | | | | |
| 16 | | | | | | | |
| 17 | | | | | | | |
| 18 | 41256204 | Print Engine Controller PWB (71K) | 1 | 3 | 6 | 12 | 1200dpi |
| | 41256206 | Print Engine Controller PWB (71K) | 1 | 3 | 6 | 12 | 600dpi |
| 19 | ~~40197101~~ | ~~Electrical Chassis Cooling Fan~~ | ~~1~~ | ~~3~~ | ~~6~~ | ~~12~~ | |
| | 40197102 | Electrical Chassis Cooling Fan | 1 | 3 | 6 | 12 | ECO-C7400-033 |
| 20 | 40864901 | CRU Basket Assembly | 1 | 3 | 6 | 12 | |
| 21 | 41275701 | Upper Cover Open Switch | 1 | 3 | 6 | 12 | |
| 22 | 41439401 | Retard Pad Assy Springs | 2 | 6 | 12 | 24 | |
| 23 | 4PB4083-2500P008 | Screw (T3×3) | 14 | - | - | - | |
| 24 | 4PB4013-3100P008 | Screw (M3×8) | 2 | - | - | - | |
| 25 | PSW2-8C | Screw (M2×8) | 1 | - | - | - | |
| 26 | 816A2323M0000 | EEPROM | 1 | 3 | 6 | 12 | |
| 27 | | | | | | | |
| 28 | 4PB4083-2500P010 | Screw (T3×10) | 13 | - | - | - | |
| 29 | 4PB4013-3100P006 | Screw (M3×6) | 42 | - | - | - | |
| 30 | 41304001 | Fuser-Unit | 1 | - | - | - | ODA(120V) |
| | 41304003 | Fuser-Unit | 1 | - | - | - | OEL/APS |
| | 41304007 | Fuser-Unit | 1 | - | - | - | ODA(230V) |

Table 7-1-2/3

| No. | Patrs No. | Name | Q'ty /Unit | Recommended Q'ty/Year | | | Remarks |
|---|---|---|---|---|---|---|---|
| | | | | per 500 | per 1000 | per 2000 | |
| 31 | 41303901 | Belt-Unit | 1 | - | - | - | ODA |
| | 41303903 | Belt-Unit | 1 | - | - | - | OEL/APS |
| 32 | 41304105 | ID-Y | 1 | - | - | - | ODA |
| | 41304106 | ID-M | 1 | - | - | - | ODA |
| | 41304107 | ID-C | 1 | - | - | - | ODA |
| | 41304108 | ID-K | 1 | - | - | - | ODA |
| | 41304109 | ID-Y | 1 | - | - | - | OEL/APS |
| | 41304110 | ID-M | 1 | - | - | - | OEL/APS |
| | 41304111 | ID-C | 1 | - | - | - | OEL/APS |
| | 41304112 | ID-K | 1 | - | - | - | OEL/APS |
| 33 | 41304205 | Toner-Cartridge_Type_C2_Y (10K) | 1 | - | - | - | ODA |
| | 41304206 | Toner-Cartridge_Type_C2_M (10K) | 1 | - | - | - | ODA |
| | 41304207 | Toner-Cartridge_Type_C2_C (10K) | 1 | - | - | - | ODA |
| | 41304208 | Toner-Cartridge_Type_C2_K (10K) | 1 | - | - | - | ODA |
| | 41304209 | Toner-Cartridge_Type_C2_Y (10K) | 1 | - | - | - | OEL |
| | 41304210 | Toner-Cartridge_Type_C2_M (10K) | 1 | - | - | - | OEL |
| | 41304211 | Toner-Cartridge_Type_C2_C (10K) | 1 | - | - | - | OEL |
| | 41304212 | Toner-Cartridge_Type_C2_K (10K) | 1 | - | - | - | OEL |
| | 41304213 | Toner-Cartridge_Type_C2_Y (10K) | 1 | - | - | - | APS |
| | 41304214 | Toner-Cartridge_Type_C2_M (10K) | 1 | - | - | - | APS |
| | 41304215 | Toner-Cartridge_Type_C2_C (10K) | 1 | - | - | - | APS |
| | 41304216 | Toner-Cartridge_Type_C2_K (10K) | 1 | - | - | - | APS |
| | 41382805 | Toner-Cartridge_Type_C2_Y (5K) | 1 | - | - | - | ODA |
| | 41382806 | Toner-Cartridge_Type_C2_M (5K) | 1 | - | - | - | ODA |
| | 41382807 | Toner-Cartridge_Type_C2_C (5K) | 1 | - | - | - | ODA |
| | 41382808 | Toner-Cartridge_Type_C2_K (5K) | 1 | - | - | - | ODA |
| | 41382809 | Toner-Cartridge_Type_C2_Y (5K) | 1 | - | - | - | OEL |
| | 41382810 | Toner-Cartridge_Type_C2_M (5K) | 1 | - | - | - | OEL |
| | 41382811 | Toner-Cartridge_Type_C2_C (5K) | 1 | - | - | - | OEL |
| | 41382812 | Toner-Cartridge_Type_C2_K (5K) | 1 | - | - | - | OEL |
| | 41382813 | Toner-Cartridge_Type_C2_Y (5K) | 1 | - | - | - | APS |
| | 41382814 | Toner-Cartridge_Type_C2_M (5K) | 1 | - | - | - | APS |
| | 41382815 | Toner-Cartridge_Type_C2_C (5K) | 1 | - | - | - | APS |
| | 41382816 | Toner-Cartridge_Type_C2_K (5K) | 1 | - | - | - | APS |

Table 7-1-3/3

| No. | Patrs No. | Name | Q'ty /Unit | Recommended Q'ty/Year | | | Remarks |
|---|---|---|---|---|---|---|---|
| | | | | per 500 | per 1000 | per 2000 | |
| 34 | 41377401 | Plate-Indicator | 1 | 3 | 6 | 12 | |
| 35 | 41716809 | PCB Assy-SWA | 1 | 3 | 6 | 12 | |
| 36 | 8164323M0000 | EEPROM(CU) | 1 | 3 | 6 | 12 | |
| 37 | 41356111 | Board-TNO | 1 | 3 | 6 | 12 | |
| 38 | | | | | | | |
| 39 | 41437418 | Board-Memory 64MB | 1 | 3 | 6 | 12 | 1200dpi-ODA |
| | 41437414 | Board-Memory 64MB | 1 | 3 | 6 | 12 | 1200dpi-OEL |
| | 41437410 | Board-Memory 64MB | 1 | 3 | 6 | 12 | 1200dpi-APS |
| 40 | 41437419 | Board-Memory 128MB | 1 | 3 | 6 | 12 | 1200dpi Duplex-ODA |
| | 41437415 | Board-Memory 128MB | 1 | 3 | 6 | 12 | 1200dpi Duplex-OEL |
| | 41437411 | Board-Memory 128MB | 1 | 3 | 6 | 12 | 1200dpi Duplex-APS |
| 41 | 41376902 | Board-MLET B09 | (1) | (3) | (6) | (12) | Option-OEL |
| | 41437302 | Board-MLET B09 | (1) | (3) | (6) | (12) | Option-APS |
| 42 | 41376005 | HDD Assy | (1) | (3) | (6) | (12) | Option-ODA |
| | 41376004 | HDD Assy | (1) | (3) | (6) | (12) | Option-OEL |
| | 41376002 | HDD Assy | (1) | (3) | (6) | (12) | Option-APS |
| 43 | 41848501 | Board Assy.-CU(Maintenance) | 1 | 3 | 6 | 12 | |
| 44 | 41278601 | Guide-Rail(A) | 1 | 3 | 6 | 12 | ECO-C7400-093 |
| 45 | 41278701 | Guide-Rail(B) | 1 | 3 | 6 | 12 | |
| 46 | 41410201 | Motor-Fan | 1 | 3 | 6 | 12 | |
| 47 | 41467401 | Plate-FG(Centro) | 1 | 3 | 6 | 12 | |
| 48 | 41254601 | Plate-Blank | 1 | 3 | 6 | 12 | ECO-C7400-093 |
| 49 | 41723901 | Screw | 1 | - | - | - | ECO-C7400-093 |
| 50 | 41723901 | Screw | 2 | - | - | - | |
| 51 | 4LB-102100-2A | Collar | 1 | - | - | - | ECO-C7400-093 |

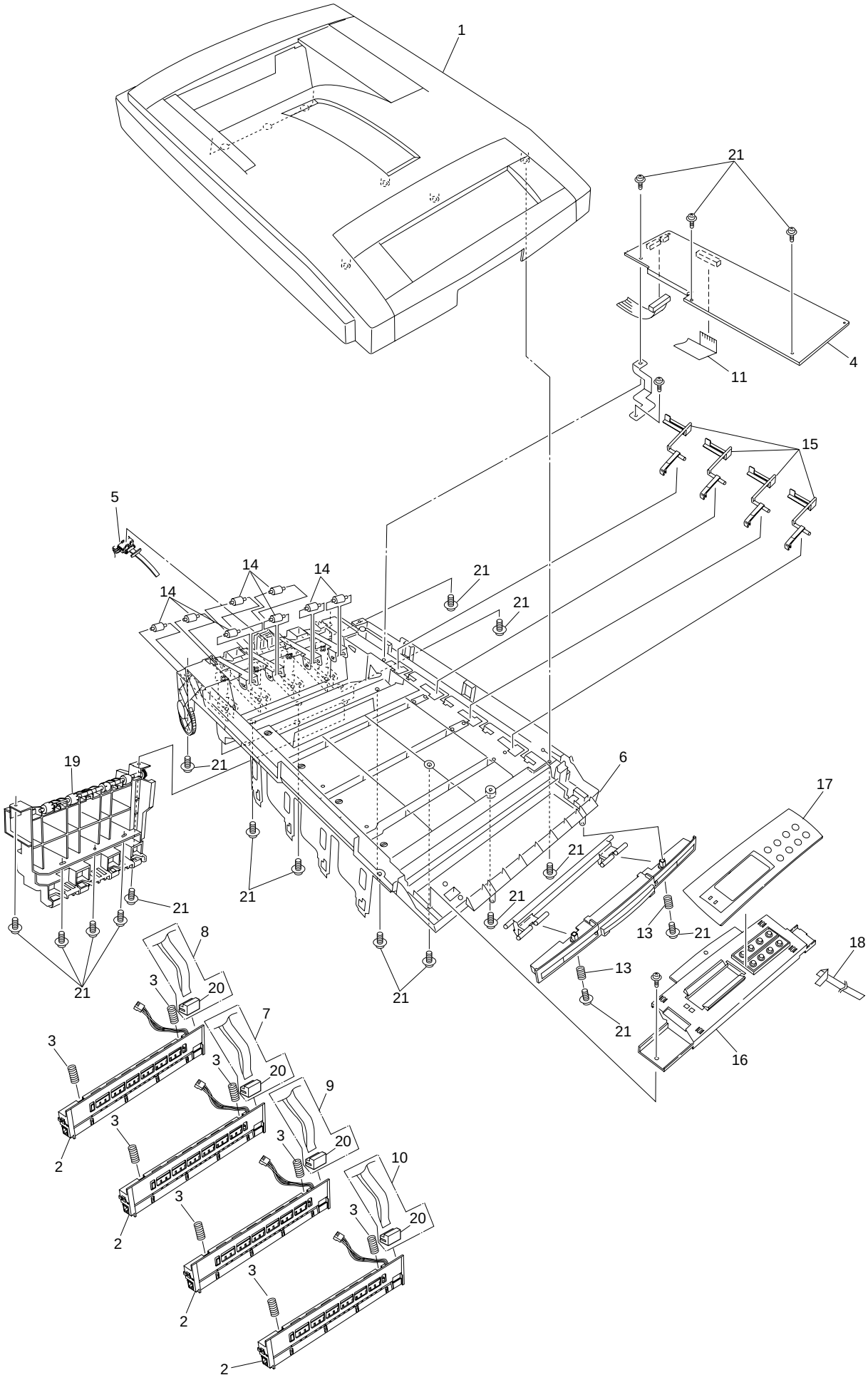
1
21
4
11
15
5
14
14
14
21
21
21
19
6
17
21
21
21
21
21
21
13
21
13
18
21
21
8
3
20
7
3
3
20
9
3
3
20
10
3
3
20
2
2
2
2
16

Figure 7-2

Table 7-2

# Top Cover Assembly

| No. | Parts No. | Name | Q'ty /Unit | Recommended Q'ty/Year | | | Remarks |
|---|---|---|---|---|---|---|---|
| | | | | per 500 | per 1000 | per 2000 | |
| 1 | 40859701 | Top Cover | 1 | 3 | 6 | 12 | |
| 2 | ~~41071401~~ | ~~LED Assy (1200dpi)~~ | ~~4~~ | ~~12~~ | ~~24~~ | ~~48~~ | ~~~~ |
| | 41072401 | LED Assy (1200dpi) | 4 | 12 | 24 | 48 | |
| | 41072402 | LED Assy (600dpi) | 4 | 12 | 24 | 48 | |
| 3 | 40861001 | LED Assy Spring | 8 | 24 | 48 | 96 | |
| 4 | 41257901 | LED Control PWB (Y71) | 1 | 3 | 6 | 12 | |
| 5 | 40365404 | Stacker Full Sensor | 1 | 3 | 6 | 12 | |
| 6 | 41316501 | Top Cover Inner Frame Kit | 1 | 3 | 6 | 12 | |
| 7 | 41309603 | LED Harness M | 1 | 3 | 6 | 12 | |
| 8 | 41309604 | LED Harness C | 1 | 3 | 6 | 12 | |
| 9 | 41309602 | LED Harness Y | 1 | 3 | 6 | 12 | |
| 10 | 41309601 | LED Harness K | 1 | 3 | 6 | 12 | |
| 11 | 41593101 | LED Control PWB Tape Harness | 1 | 3 | 6 | 12 | |
| 12 | | | | | | | |
| 13 | | | | | | | |
| 14 | ~~40316701~~ | ~~Eject Roller~~ | ~~8~~ | ~~24~~ | ~~48~~ | ~~96~~ | ~~~~ |
| | 41765601 | Eject Roller | 8 | 24 | 48 | 96 | ECO-C7400-033 |
| 15 | 40860601 | Toner Sensor | 4 | 12 | 24 | 48 | |
| 16 | 40866101 | Control Panel Assy | 1 | 3 | 6 | 12 | |
| 17 | 40866201 | Control Panel Bezel | 1 | 3 | 6 | 12 | 600dpi |
| | 40866202 | Control Panel Bezel | 1 | 3 | 6 | 12 | 1200dpi |
| 18 | ~~2381005P0015~~ | ~~Control Panel Tape Harness~~ | ~~1~~ | ~~3~~ | ~~6~~ | ~~12~~ | ~~~~ |
| | 2381003P0014 | Control Panel Tape Harness | 1 | 3 | 6 | 12 | ECO-C7400-001 |
| 19 | 40861501 | Eject Guide Assy | 1 | 3 | 6 | 12 | |
| 20 | 2251001P0260 | 26pin LED Connector | 4 | 12 | 24 | 48 | |
| 21 | 4PB4083-2500P008 | Screw (T3×8) | 19 | - | - | - | |
| | 41733701 | Gear-Inner | 2 | 6 | 12 | 24 | ECO-C7400-005 |
| | 41778001 | Gear-Inner | 2 | 6 | 12 | 24 | ECO-C7400-024 |

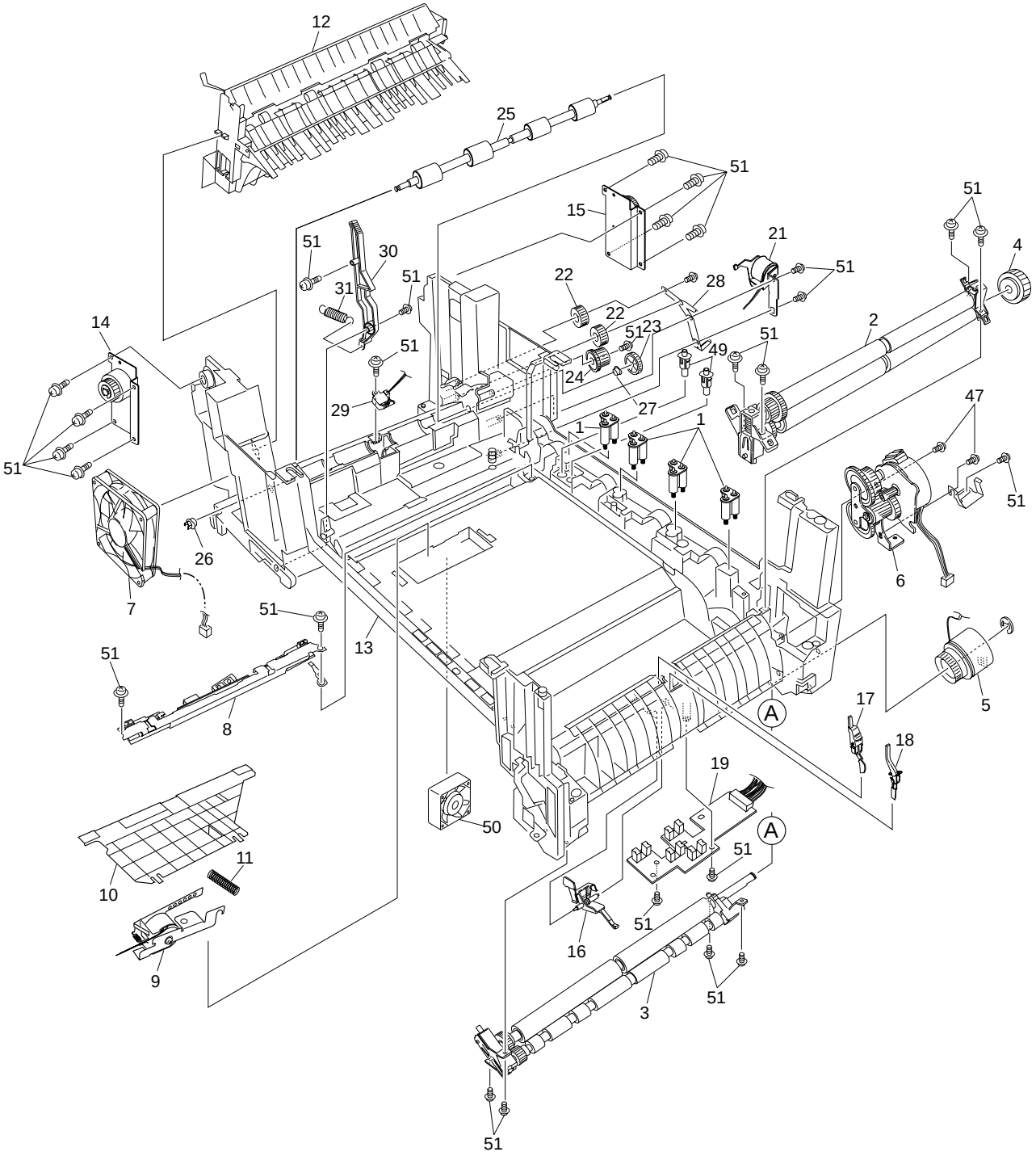
12
25
51
15
51
30
31
51
22
28
21
51
4
22
51
23
51
2
14
51
49
24
27
29
1
1
47
51
51
26
6
7
51
13
51
8
A
17
5
18
19
50
A
51
11
10
51
16
9
51
3
51

Figure 7-3-1/2

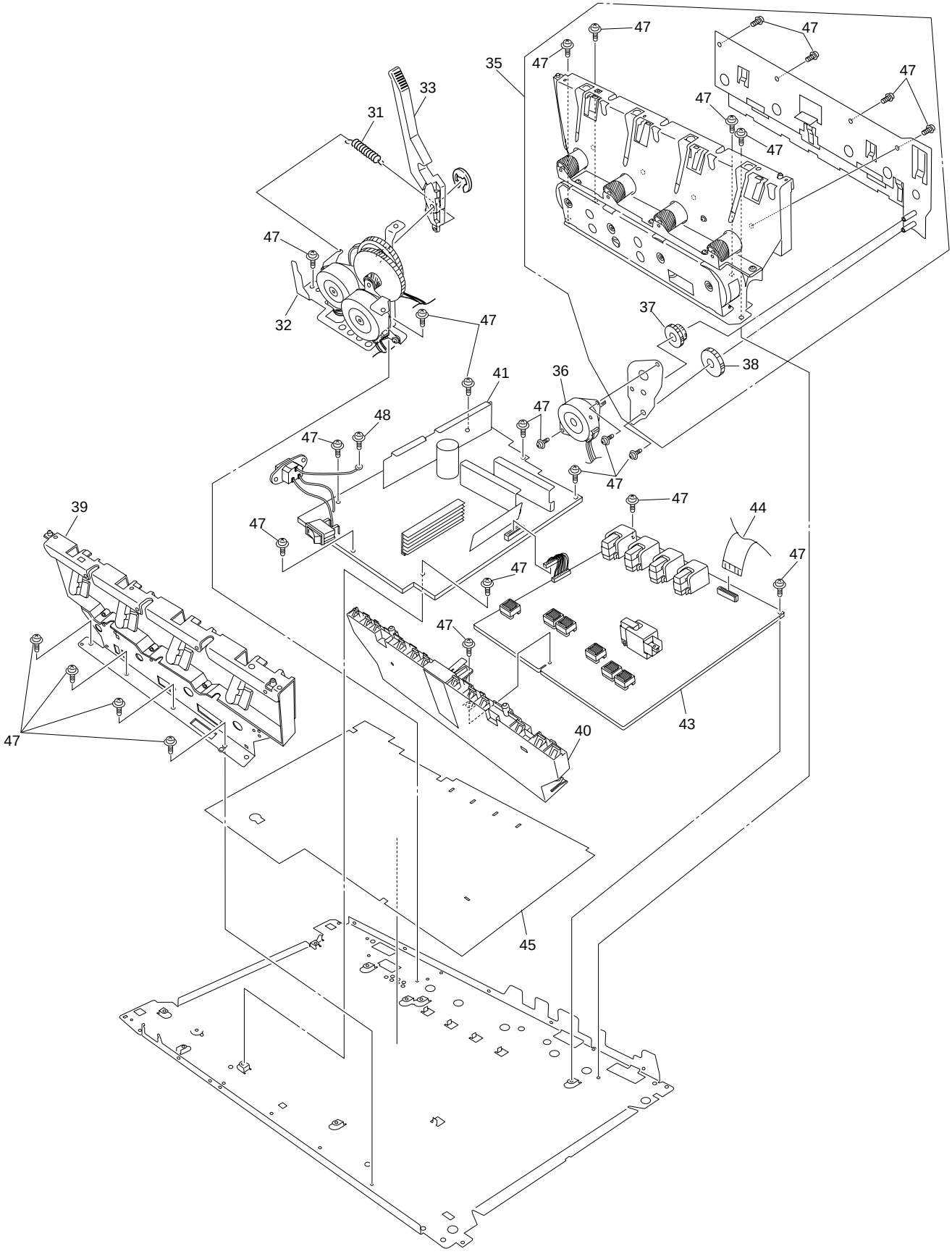
47
47
47
35
47
47
33
31
47
47
32
47
37
38
41
36
47
48
47
47
47
39
47
44
47
47
47
47
43
40
45

Figure 7-3-2/2

Table 7-3-1/2

# Printer Unit Chassis

| No. | Parts No. | Name | Q'ty /Unit | Recommended Q'ty/Year | | | Remarks |
|---|---|---|---|---|---|---|---|
| | | | | per 500 | per 1000 | per 2000 | |
| 1 | 41189701 | Drum contact Assy | 4 | 12 | 24 | 48 | |
| 2 | 40844301 | Registration Roller Assy (A) | 1 | 3 | 6 | 12 | |
| 3 | 40844303 | Registration Roller Assy (B) | 1 | 3 | 6 | 12 | |
| 4 | 40845401 | Registration Drive Gear | 1 | 3 | 6 | 12 | |
| 5 | 41187101 | Registration Clutch | 1 | 3 | 6 | 12 | |
| 6 | 40845801 | Registration Motor Assy | 1 | 3 | 6 | 12 | |
| 7 | 3PB4076-5290P001 | Main Cooling Fan | 1 | 3 | 6 | 12 | |
| 8 | 41346801 | Color Registration Sensor Assy | 1 | 3 | 6 | 12 | |
| 9 | 41253701 | Registration Shutter Solenoid | 1 | 3 | 6 | 12 | |
| 10 | 41275201 | Registration Shutter | 1 | 3 | 6 | 12 | |
| 11 | 41275301 | Registration Shutter Spring | 1 | 3 | 6 | 12 | |
| 12 | 40859201 | Duplex Guide Assy | 1 | 3 | 6 | 12 | |
| 13 | 40841101 | Printer Unit Chassis | 1 | 3 | 6 | 12 | |
| 14 | 41312801 | Left Top Cover Spring Assy | 1 | 3 | 6 | 12 | |
| 15 | 41312901 | Right Top Cover Spring Assy | 1 | 3 | 6 | 12 | |
| 16 | 40841601 | Entrance Sensor Actuator #1 | 1 | 3 | 6 | 12 | |
| 17 | 40841701 | Entrance Sensor Actuator #2 | 1 | 3 | 6 | 12 | |
| 18 | 40841801 | Entrance Sensor Actuator #3 | 1 | 3 | 6 | 12 | |
| 19 | 41258301 | Entrance Sensor PWB (R71) | 1 | 3 | 6 | 12 | |
| 20 | | | | | | | |
| 21 | 41253601 | Duplex Gate Solenoid Assy | 1 | 3 | 6 | 12 | |
| 22 | 40842401 | Fuser Drive Gear -A | 2 | 6 | 12 | 24 | |
| 23 | 40316301 | Fuser Drive Gear -B | 1 | 3 | 6 | 12 | |
| 24 | 41067201 | Fuser Drive Gear -C | 1 | 3 | 6 | 12 | |
| 25 | 40323901 | Fuser Exit Roller | 1 | 3 | 6 | 12 | |
| 26 | 4PP4076-3949P001 | Fuser Exit Roller Bushing (L) | 1 | 3 | 6 | 12 | |
| 27 | 4PP4043-4489P001 | Fuser Exit Roller Bushing (R) | 1 | 3 | 6 | 12 | |
| 28 | 40842501 | Fuser Exit Roller Contact | 1 | 3 | 6 | 12 | |
| 29 | 41073601 | Exit Sensor Assy | 1 | 3 | 6 | 12 | |
| 30 | 40841301 | Fuser Latching Handle (L) | 1 | 3 | 6 | 12 | |
| 31 | 40841501 | Fuser Latching Handle Springs | 2 | 6 | 12 | 24 | |
| 32 | 40848801 | Belt Motor Assy | 1 | 3 | 6 | 12 | |
| 33 | 40841401 | Fuser Latching Handle (R) | 1 | 3 | 6 | 12 | |
| 34 | | | | | | | |
| 35 | 40847301 | Main Motor Assy | 1 | 3 | 6 | 12 | |

Table 7-3-2/2

| No. | Parts No. | Name | Q'ty /Unit | Recommended Q'ty/Year | | | Remarks |
|---|---|---|---|---|---|---|---|
| | | | | per 500 | per 1000 | per 2000 | |
| 36 | 40846001 | Main Feeder Drive Motor | 1 | 3 | 6 | 12 | |
| 37 | 40848501 | Main Feeder Drive Gear A | 1 | 3 | 6 | 12 | |
| 38 | 40848601 | Main Feeder Drive Gear B | 1 | 3 | 6 | 12 | |
| 39 | 41303601 | Left Plate Assy | 1 | 3 | 6 | 12 | |
| 40 | 40850201 | Contact Assy | 1 | 3 | 6 | 12 | |
| 41 | 40737401 | Power-Unit AC-DC-switching(115V) | 1 | 3 | 6 | 12 | |
| | 40737402 | Power-Unit AC-DC-switching(115V) | 1 | 3 | 6 | 12 | ECO-C7400-064 |
| | 40737501 | Power-Unit AC-DC-switching(230V) | 1 | 3 | 6 | 12 | |
| | 40737502 | Power-Unit AC-DC-switching(230V) | 1 | 3 | 6 | 12 | ECO-C7400-064 |
| 42 | | | | | | | |
| 43 | 40737601 | Power-Unit (high-voltage) | 1 | 3 | 6 | 12 | |
| 44 | ~~2381018P0001~~ | ~~HV Tape Harness~~ | ~~1~~ | ~~3~~ | ~~6~~ | ~~12~~ | |
| | 2381003P0016 | HV Tape Harness | 1 | 3 | 6 | 12 | ECO-C7400-001 |
| 45 | 41128101 | Power Supply Insulator | 1 | 3 | 6 | 12 | |
| 46 | | | | | | | |
| 47 | 4PB4013-3100P006 | Screw (M3×6) | 26 | - | - | - | |
| 48 | PSW4-8C | Screw (M4×8) | 1 | - | - | - | |
| 49 | 41346301 | Transfer Contact Assy | 2 | 6 | 12 | 24 | |
| 50 | 41469001 | Power Cooling Fan | 1 | 3 | 6 | 12 | |
| 51 | 4PB4083-2500P008 | Screw (T3×8) | 29 | - | - | - | |

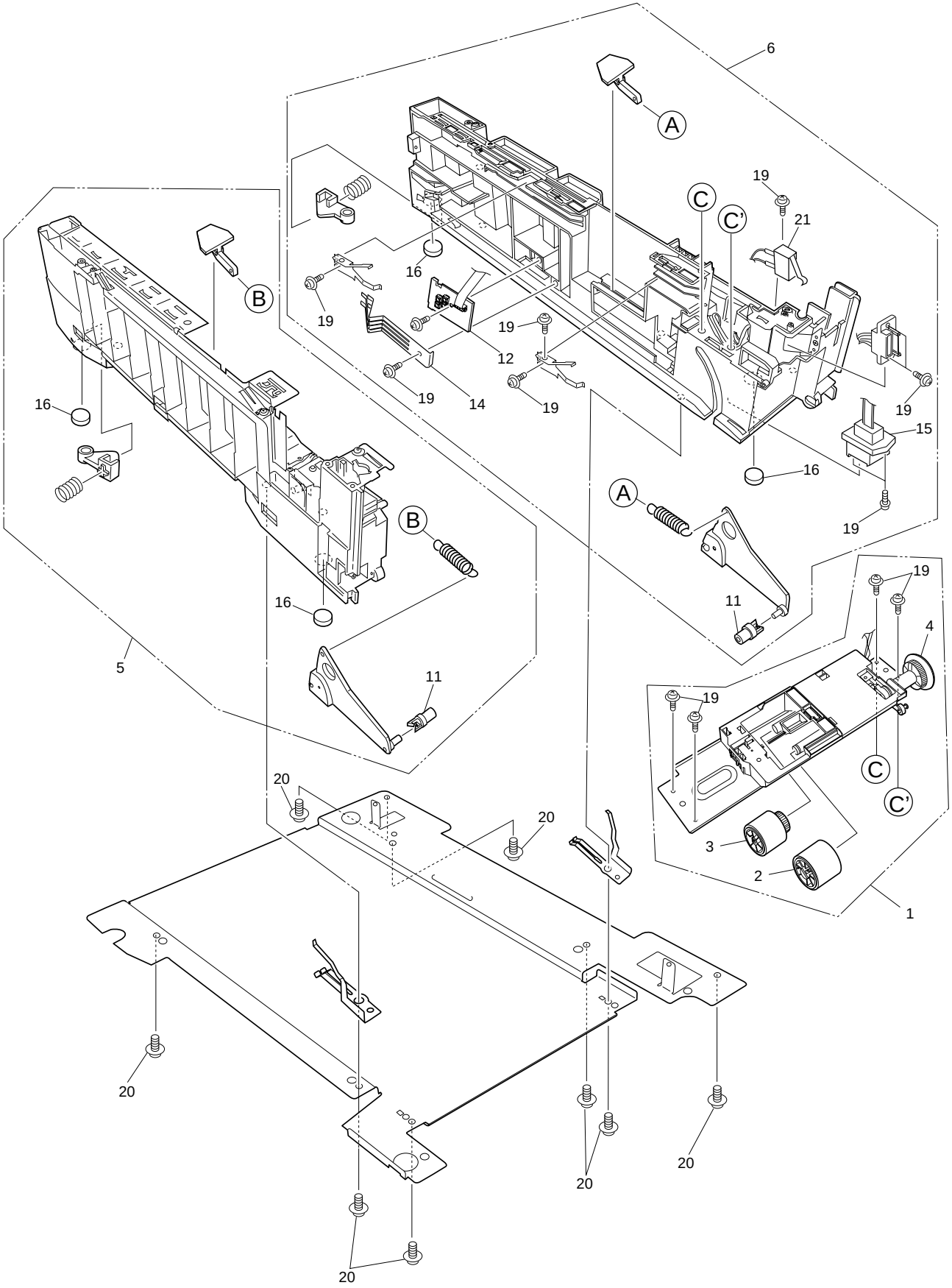
6
A
19
C
C'
21
16
B
19
19
12
19
14
19
19
15
16
16
A
19
B
16
11
19
4
5
11
19
C
C'
20
20
3
2
1
20
20
20
20

Figure 7-4

Table 7-4

# Paper Tray Guide

| No. | Parts No. | Name | Q'ty /Unit | Recommended Q'ty/Year | | | Remarks |
|---|---|---|---|---|---|---|---|
| | | | | per 500 | per 1000 | per 2000 | |
| 1 | 40839801 | Main Feed Assy | 1 | 3 | 6 | 12 | |
| 2 | 40371301 | Feed Roller | 1 | 3 | 6 | 12 | |
| 3 | 40313201 | Nudger Roller | 1 | 3 | 6 | 12 | |
| 4 | 40325401 | Main Feeder Drive Gear | 1 | 3 | 6 | 12 | |
| 5 | 40839001 | Left Cassette Guide Assy | 1 | 3 | 6 | 12 | |
| 6 | 40839401 | Right Cassette Guide Assy | 1 | 3 | 6 | 12 | |
| 7 | | | | | | | |
| 8 | | | | | | | |
| 9 | | | | | | | |
| 10 | | | | | | | |
| 11 | 40349701 | Plastic Roller | 2 | 6 | 12 | 24 | |
| 12 | 40368304 | Paper Size Sensing PWB PXC | 1 | 3 | 6 | 12 | |
| 13 | | | | | | | |
| 14 | 4PP4076-5360P001 | Paper Size Actuator | 1 | 3 | 6 | 12 | |
| 15 | ~~41309301~~ | ~~2nd Tray Connector~~ | ~~1~~ | ~~3~~ | ~~6~~ | ~~12~~ | |
| | 41309101 | 2nd Tray Connector | 1 | 3 | 6 | 12 | |
| 16 | ~~4PB4016-1960P002~~ | ~~Foot~~ | ~~4~~ | ~~12~~ | ~~24~~ | ~~48~~ | |
| | 4PB4016-1960P004 | Foot | 4 | 12 | 24 | 48 | ECO-C7400-033 |
| 17 | | | | | | | |
| 18 | | | | | | | |
| 19 | 4PB4083-2500P008 | Screw (T3×8) | 13 | - | - | - | |
| 20 | 4PB4083-5670P002 | Screw (T4×10) | 8 | - | - | - | |
| 21 | 41275901 | Front Cover Open Switch | 1 | 3 | 6 | 12 | |

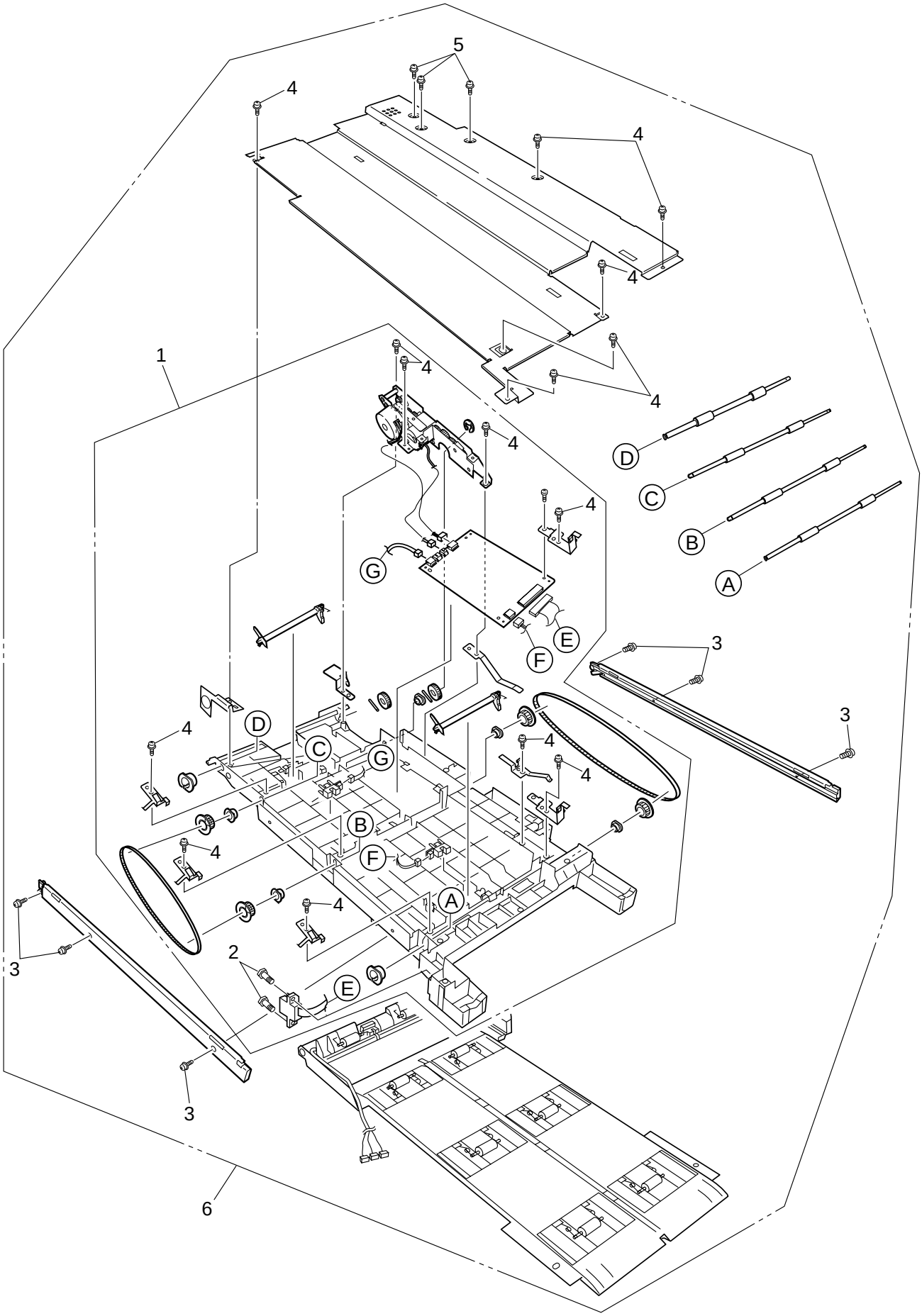


Figure 7-5

Table 7-5

# Duplex Unit

| No. | Parts No. | Name | Q'ty /Unit | Recommended Q'ty/Year | | | Remarks |
|---|---|---|---|---|---|---|---|
| | | | | per 500 | per 1000 | per 2000 | |
| 1 | 41305301 | Duplex Transport Assy | 1 | 3 | 6 | 12 | |
| 2 | 4PB4043-4718P001 | Screw (SP3×10) | 2 | - | - | - | |
| 3 | 4PB4083-2500P010 | Screw (T3×10) | 6 | - | - | - | |
| 4 | 4PB4083-2500P008 | Screw (T3×8) | 15 | - | - | - | |
| 5 | 4PB4013-3100P006 | Screw (M3×6) | 3 | - | - | - | |
| 6 | 41372901 | Duplex Unit | 1 | - | - | - | ODA |
| | 41372903 | Duplex Unit | 1 | - | - | - | OEL |
| | 41372907 | Duplex Unit | 1 | - | - | - | APS |